Parts Manual

Mfg. No: 31P777-0299-E1

Copyright © Briggs & Stratton. All Rights reserved

18-May-2024

Model Components

Page

Air Cleaner, Blower Housing, Exhaust System, Fuel Supply. 4
Alternator, Controls, Electric Starter, Governor Spring, Ignition. 8
Camshaft, Crankshaft, Counterweight, Cylinder, Engine Sump, Gasket Set - Engine, Operator's Manual, Piston, 12
Carburetor, Kit - Carburetor Overhaul. 18
Cylinder Head, Gasket Set - Valve, Intake Manifold, Lubrication, Valves. 24
Flywheel. 28
Replacement Engine - US & Canada. 32

Not For Reproduction

Copyright © Briggs & Stratton. All Rights reserved

Mfg. No: 31P777-0299-E1

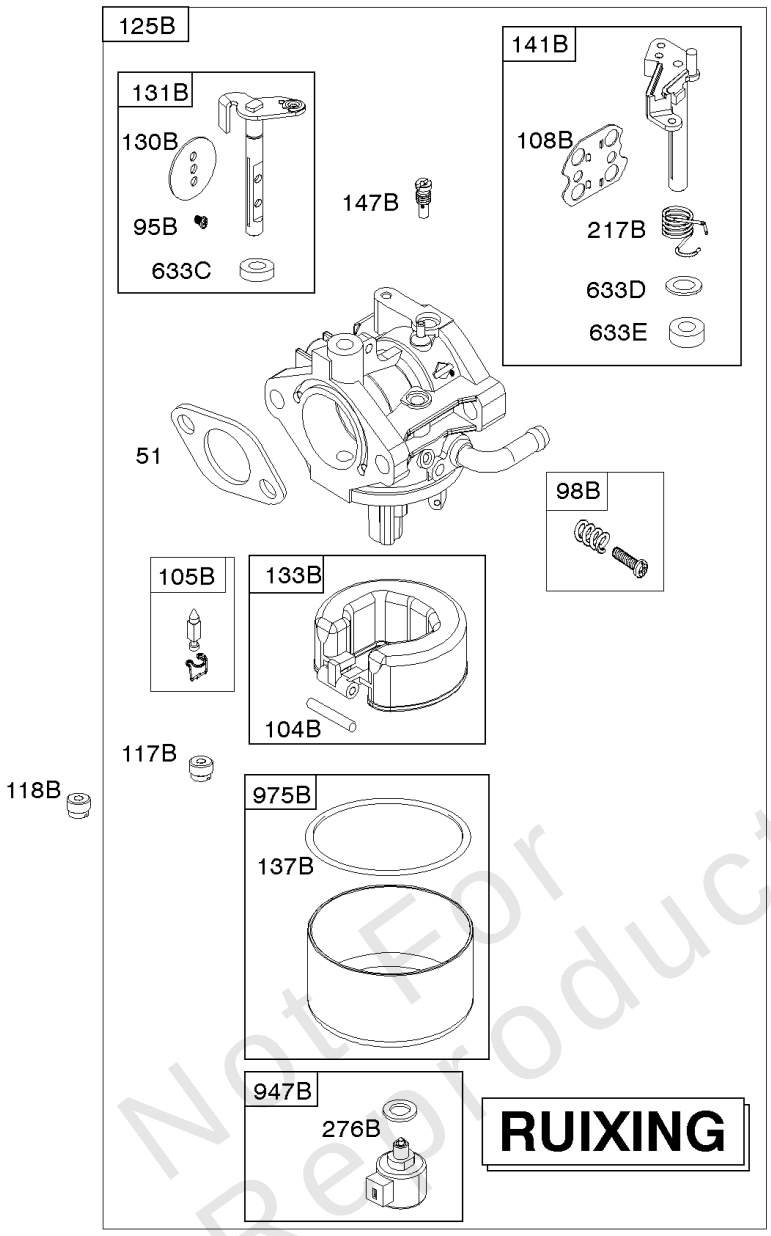

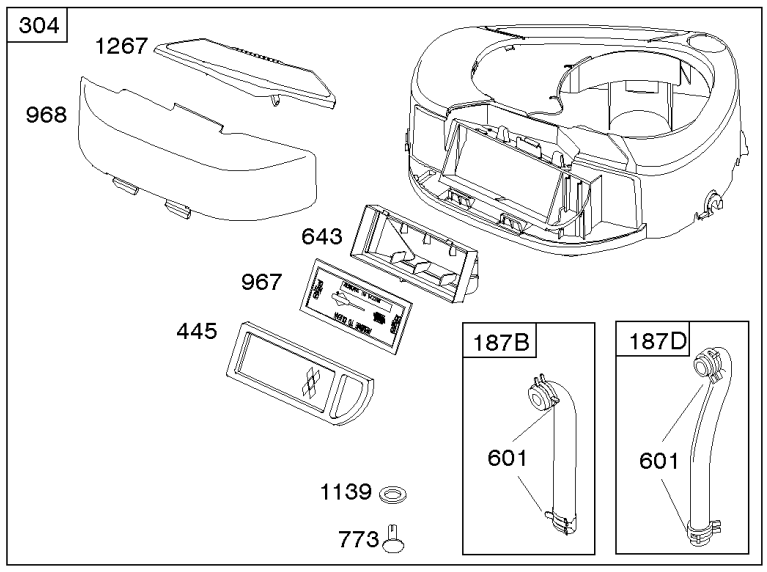

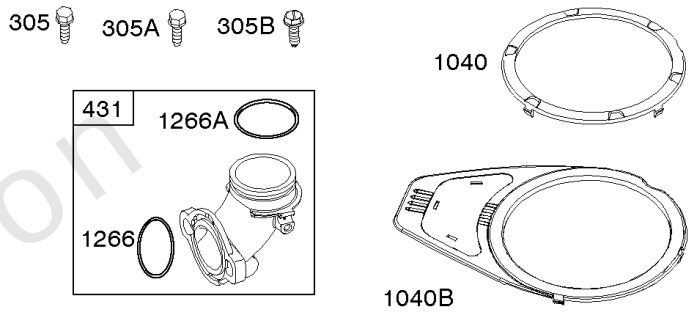

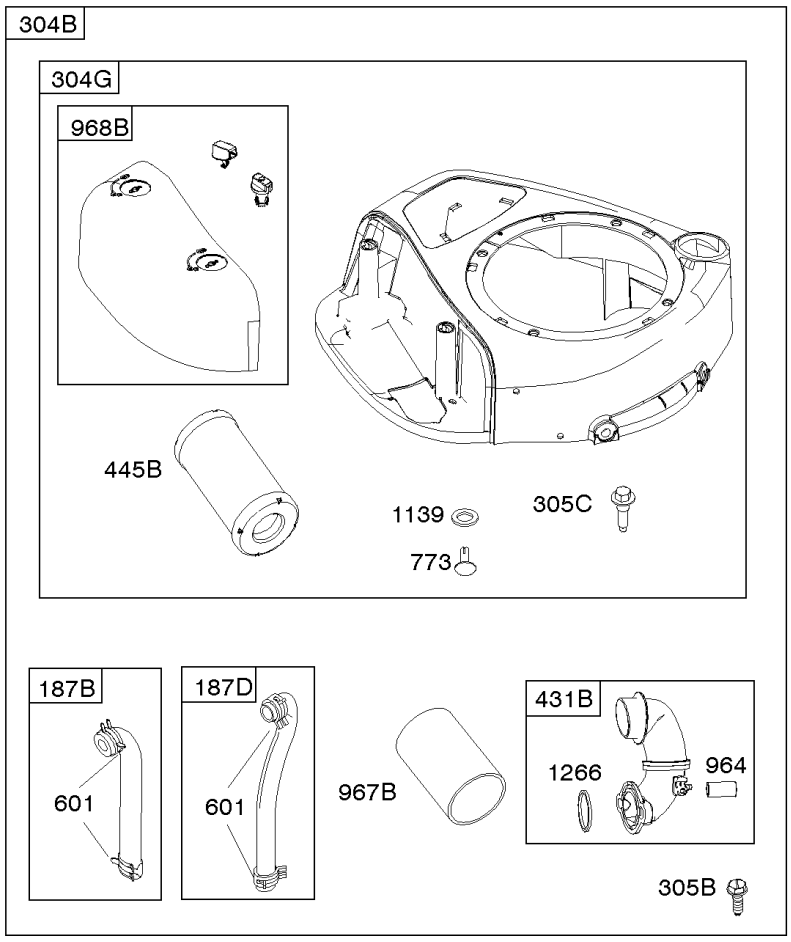

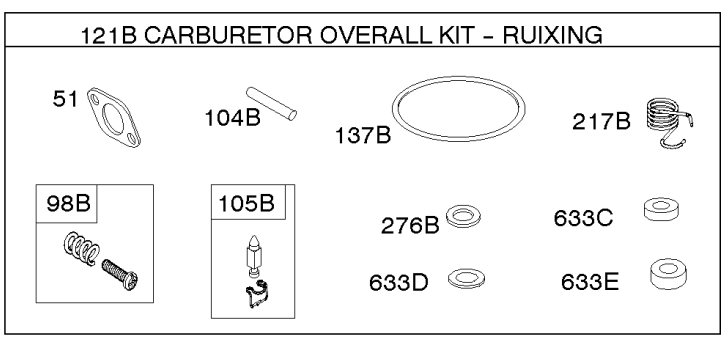

Not For Reproduction

Copyright © Briggs & Stratton. All Rights reserved

REF NO	PART NO	QTY	DESCRIPTION
51	692137		GASKET-INTAKE
95B	593897		SCREW -(Throttle Valve) (Ruixing) -Used After Code Date 15112900
98B	846817		KIT, Idle Speed -(Ruixing) -Used After Code Date 15112900
104B	594860		PIN, Float Hinge -(Ruixing) -Used After Code Date 15112900
105B	594868		VALVE, Float Needle -(Ruixing) -Used After Code Date 15112900
108B	594863		VALVE, Choke -(Ruixing) -Used After Code Date 15112900
121B	594886		KIT, Carburetor Overhaul -(Ruixing) -Used After Code Date 15112900
125B	594593		CARBURETOR -(Ruixing) -Used After Code Date 15112900
130B	594857		VALVE, Throttle -(Ruixing) -Used After Code Date 15112900
131B	594855		KIT, Throttle Shaft -(Ruixing) -Used After Code Date 15112900
133B	594859		FLOAT, Carburetor -(Ruixing) -Used After Code Date 15112900
137B	594861		GASKET, Float Bowl -(Ruixing) -Used After Code Date 15112900
141B	594862		KIT, Choke Shaft -(Ruixing) -Used After Code Date 15112900
147B	594870		JET, Pilot -(Ruixing) -Used After Code Date 15112900
187B	791805		LINE, Fuel -(Formed)(Cut To Required Length)
187D	791744		LINE, Fuel -(Formed)(14 Inches Long)(Cut To Required Length)
217B	594864		SPRING, Choke Return -(Ruixing) -Used After Code Date 15112900
276B	846640		WASHER, Sealing -(Ruixing) -Used After Code Date 15112900
304	796416		HOUSING, Blower -(See Reference 304B For Service)
304B	591907		HOUSING-BLOWER -(Black-Compatible With Canister Style Filter)
304G	591643		HOUSING, Blower -(Black w/threaded inserts-Compatible With Canister Style Filter)
304G	591642		HOUSING, Blower -(Black-Compatible With Canister Style Filter)
305	697102		SCREW -(Blower Housing)
305A	793376		SCREW -(Blower Housing) (Used On Non-Grommet Style Blower Housings)

Not For Reproduction

Copyright © Briggs & Stratton. All Rights reserved

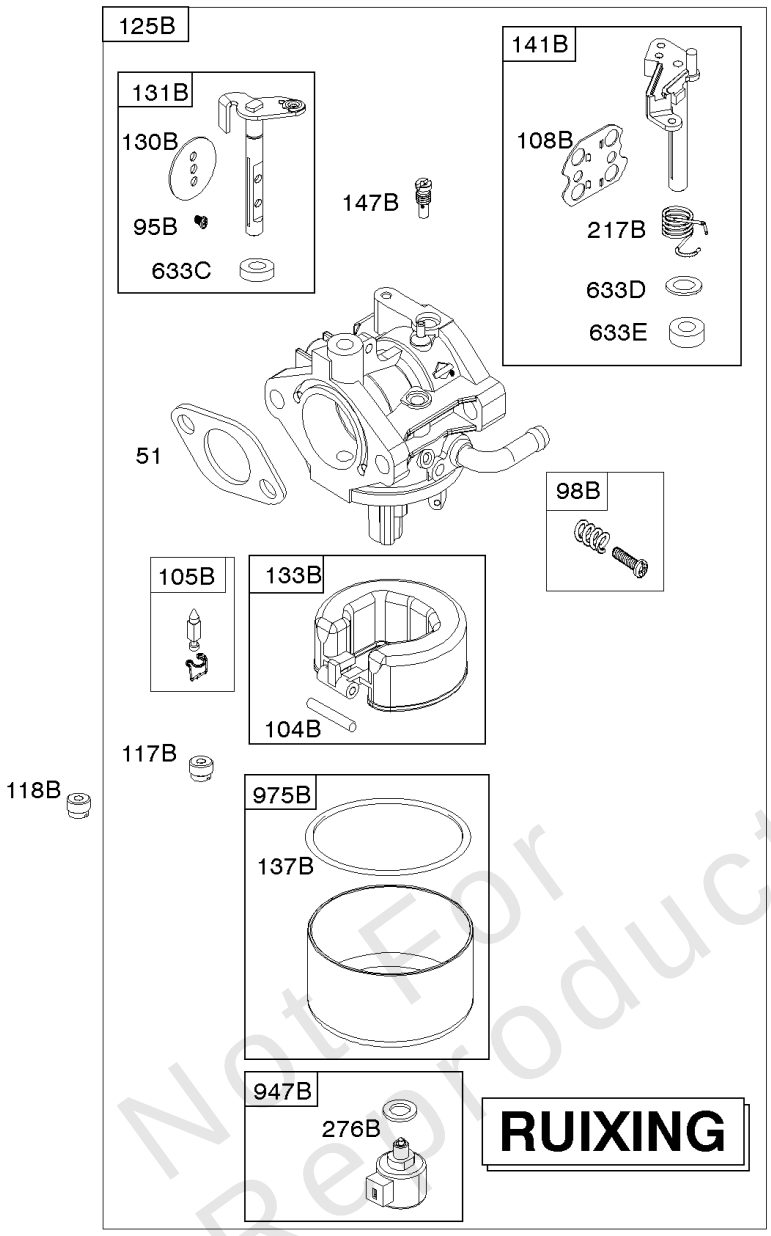

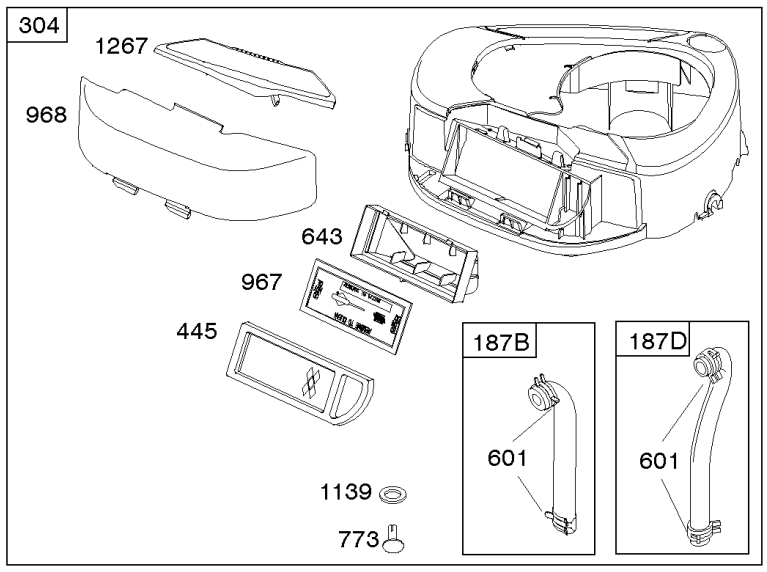

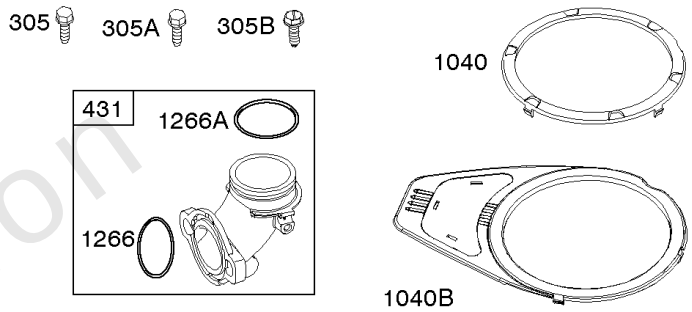

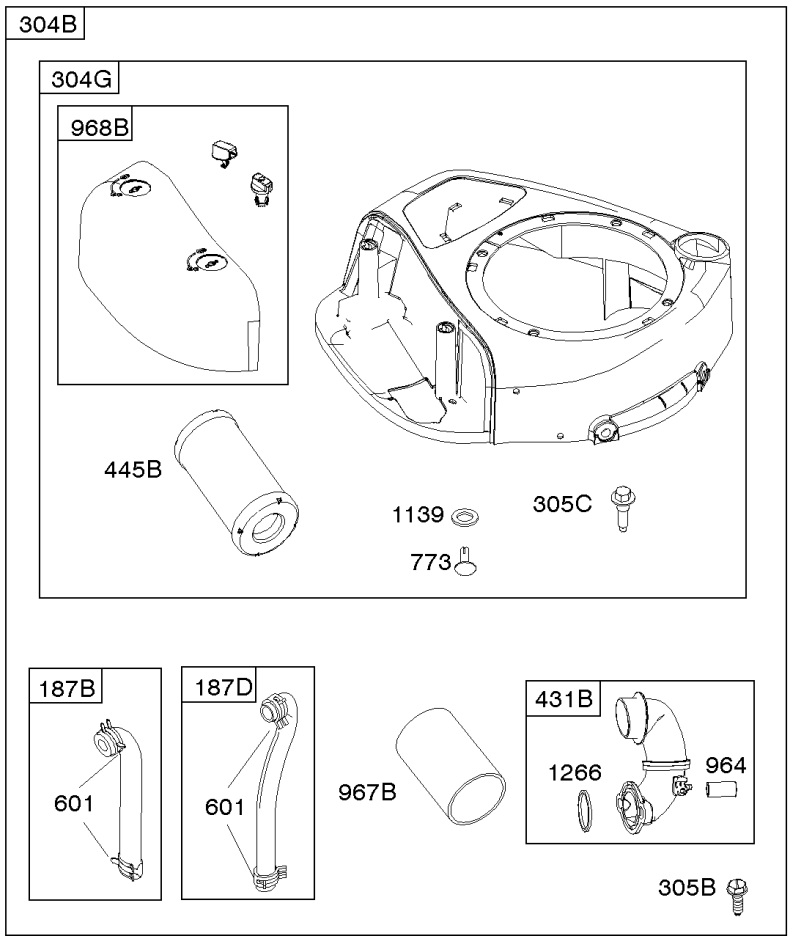

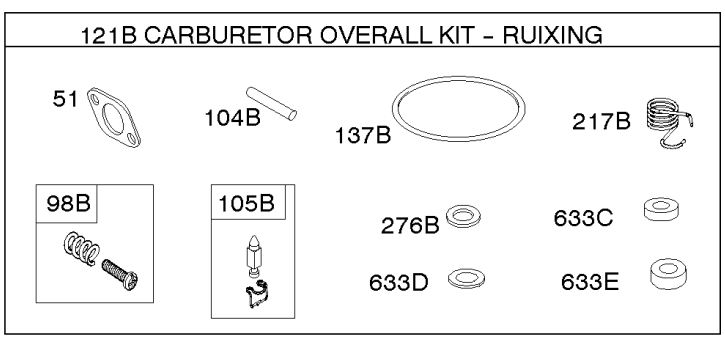

Not For Reproduction

REF NO	PART NO	QTY	DESCRIPTION
305B	795891		SCREW -(Blower Housing) (Blower Housing To Intake Elbow)
305C	799370		SCREW -(Blower Housing) (Used On Grommet Style Blower Housings)
431	697122		MANIFOLD, Intake
445	794422		FILTER-A/C CARTRIDGE
445	795115		FILTER, A/C Cartridge -(Premium)
445B	594201		FILTER, A/C Cartridge -(Canister)
601	791850		CLAMP, Hose -(Green)
633C	594866		SEAL, Choke/Throttle Shaft -(Ruixing) -Used After Code Date 15112900
633D	594865		SEAL, Choke/Throttle Shaft -(Ruixing) -Used After Code Date 15112900
633E	797629		SEAL, Choke/Throttle Shaft -(Ruixing) -Used After Code Date 15112900
643	698401		RETAINER, Air Filter
773	796448		RETAINER
947B	846639		SOLENOID, Fuel -(Ruixing) -Used After Code Date 15112900
964	799159		CAP, Connector
967	697015		FILTER, Pre Cleaner -(Compatible with Flat Panel Style Filter)
967B	797704		FILTER, Pre Cleaner -(Compatible with Canister Style Filter)
968	698403		COVER, Air Cleaner -(Red) -Used After Code Date 08082400
968	699986		COVER, Air Cleaner -(Black) -Used Before Code Date 08082500
968	699848		COVER, Air Cleaner -(Red) -Used Before Code Date 08082500
975B	594867		BOWL, Float -(Ruixing) -Used After Code Date 15112900
1040	698368		PLATE, Trim
1040B	699852		PLATE, Trim
1139	796449		WASHER -(Fuel Pump Bracket)
1266	691917		SEAL, O-Ring -(Intake Elbow)
1266A	697123		SEAL, O-Ring -(Intake Elbow)
1267	697419		LATCH, Blower Housing

Not For Reproduction

Copyright © Briggs & Stratton. All Rights reserved

Alternator, Controls, Electric Starter, Governor Spring, Ignition

Mfg. No: 31P777-0299-E1

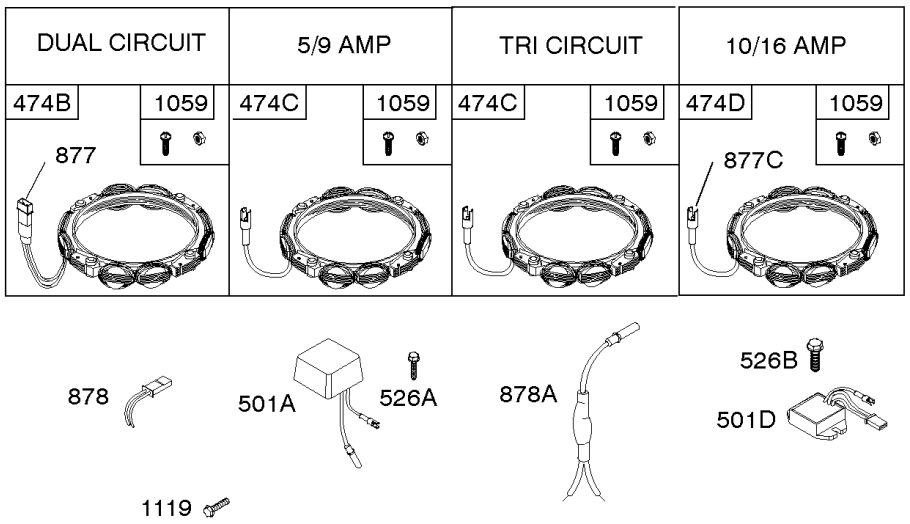

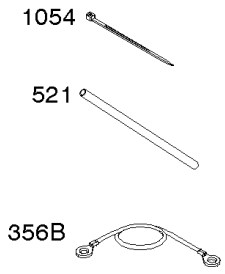

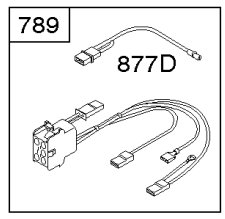

NOTE: *All stators use a No. 1119 mounting screw.*

NOTE: *The proper flywheel part number and/or the alternator magnet size will determine the alternator type or output. See repair instruction manual for additional information.*

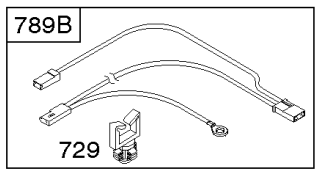

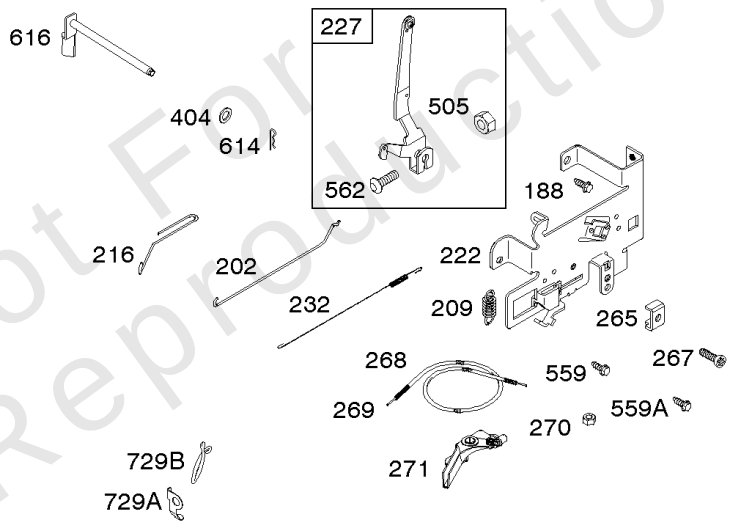

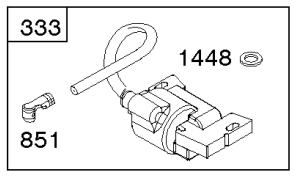

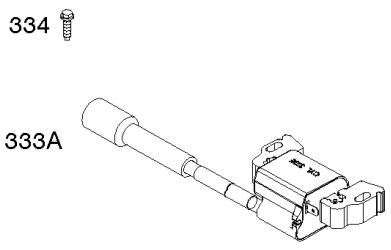

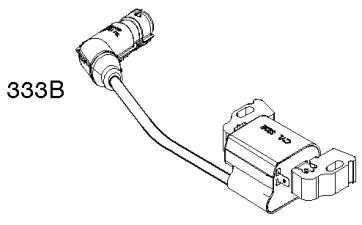

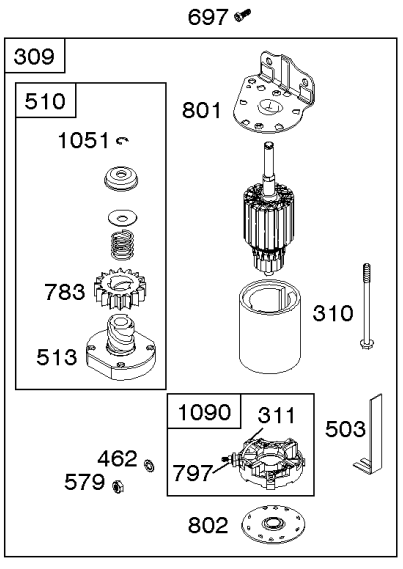

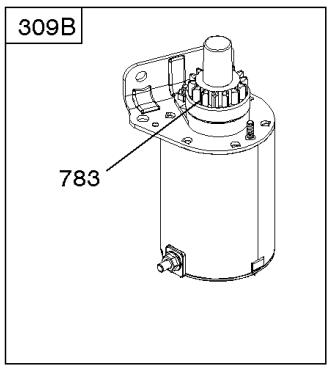

Not For Reproduction

REF NO	PART NO	QTY	DESCRIPTION
188	691693		SCREW -(Control Bracket)
202	691841		LINK, Mechanical Governor
209	796260		SPRING, Governor
216	691840		LINK, Choke
222	694042		BRACKET, Control
227	691374		LEVER, Governor Control
232	691842		SPRING, Governor Link
265	691024		CLAMP, Casing
267	794904		SCREW -(Casing Clamp)
268	691025		CASING, Control Wire -(Cut To Required Length)
269	691026		WIRE, Control -(Cut To Required Length)
270	691027		NUT -(Control Wire Casing)
271	691028		LEVER, Control
309	593934		MOTOR, Starter
310	690323		SCREW -(Starter Motor)
311	497608		SET, Brush
333	799650		ARMATURE, Magneto -Used Before Code Date 16070100
334	691061		SCREW -(Magneto Armature)
356B	697089		WIRE, Stop
404	691691		WASHER -(Governor Crank)
462	691261		WASHER -(Starter Cable)
474B	592831		ALTERNATOR -(Dual Circuit)
501A	794360		REGULATOR -(5/9 Amp.)
501D	845907		REGULATOR -(10-16 AMP.)
503	691532		STRAP, Starter
505	691251		NUT -(Governor Control Lever)
510	693699		DRIVE, Starter
513	692024		CLUTCH, Drive
521	690581		SHIELD, Cable
526A	697088		SCREW -(Regulator)
526B	697348		SCREW -(Regulator)
559	697561		SCREW -(Remote Choke Stop) (Length .375 Inches)
559A	693675		SCREW -(Remote Choke Stop) (Length .419 Inches)
562	691119		BOLT -(Governor Control Lever)
579	691029		NUT -(Starter Cable)
614	691620		PIN, Cotter
616	692012		CRANK, Governor

Not For Reproduction

Copyright © Briggs & Stratton. All Rights reserved

Alternator, Controls, Electric Starter, Governor Spring, Ignition

Mfg. No: 31P777-0299-E1

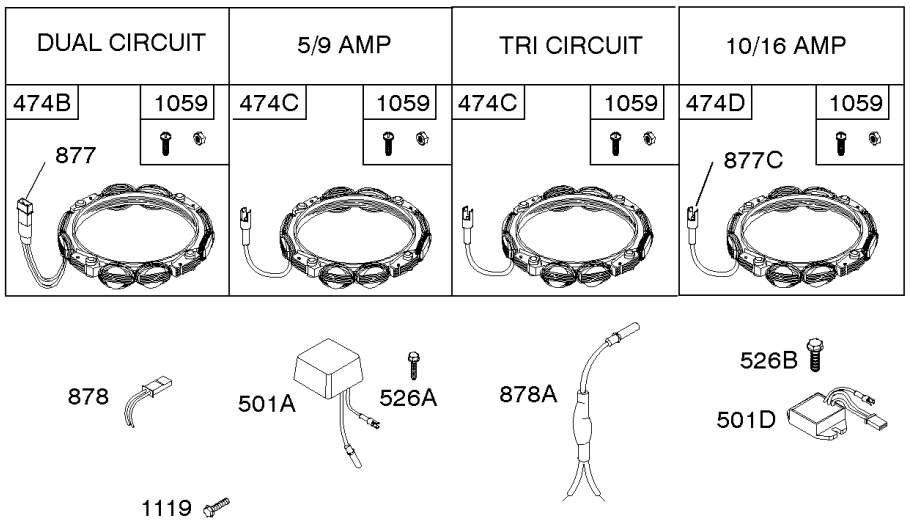

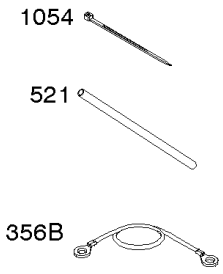

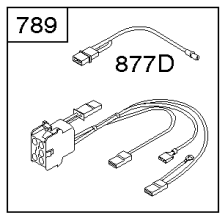

NOTE: *All stators use a No. 1119 mounting screw.*

NOTE: *The proper flywheel part number and/or the alternator magnet size will determine the alternator type or output. See repair instruction manual for additional information.*

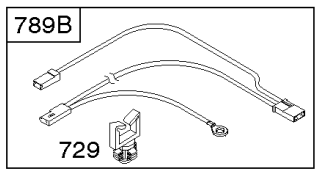

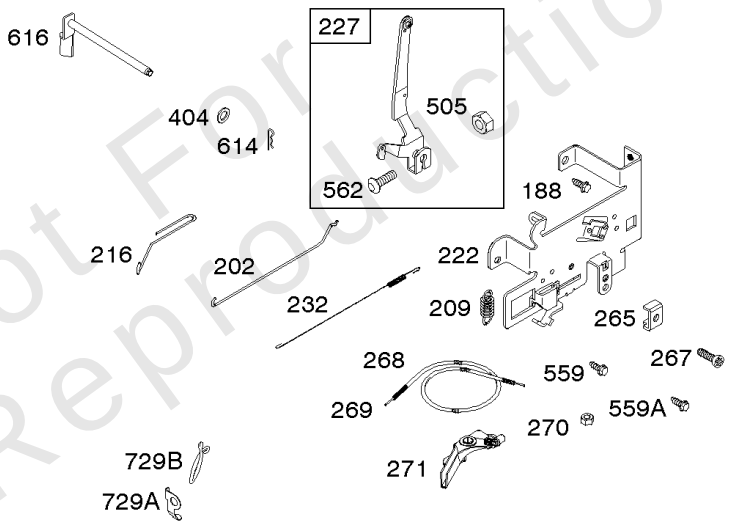

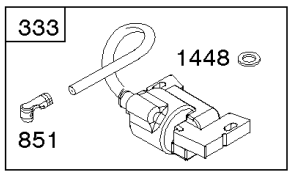

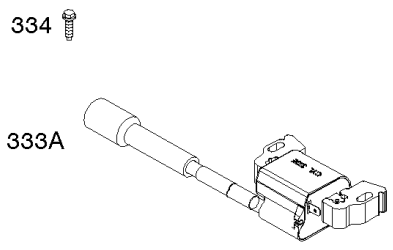

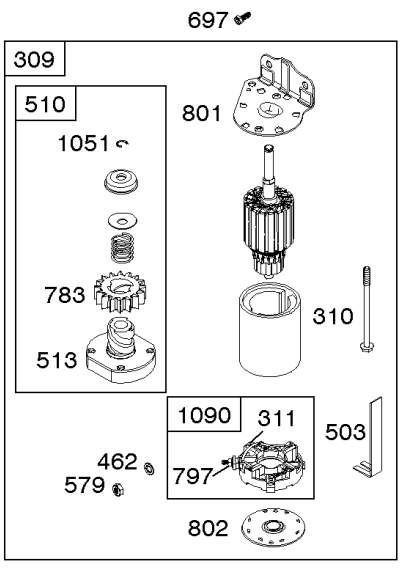

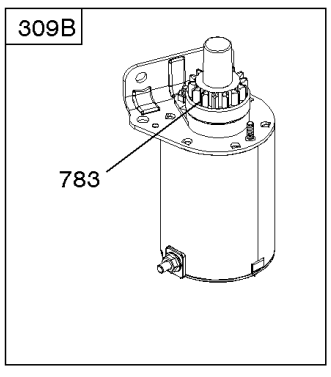

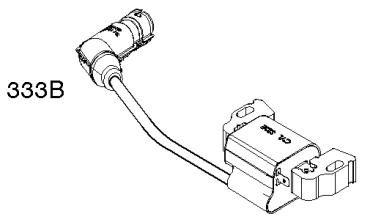

Not For Reproduction

Alternator, Controls, Electric Starter, Governor Spring, Ignition

REF NO	PART NO	QTY	DESCRIPTION
697	791680		SCREW -(Starter Motor) (Drive Cap)
729	691335		CLIP, Wire
729A	691224		CLIP, Wire
729B	694123		CLIP, Wire
783	593935		GEAR, Pinion
789	698329		HARNESS, Wiring
789B	692037		HARNESS-WIRING
797	693167		NUT -(Brush Retainer)
801	691283		CAP, Drive
802	691286		CAP, End
851	692424		TERMINAL, Spark Plug
877	393456		WIRE/CONNECTOR, Alternator -(Dual Circuit)
877C	399916		WIRE/CONN-ALTERNATOR
877D	790544		WIRE/CONNECTOR, Alternator
878	398661		HARNESS, Wiring -(Dual Circuit)
878A	691955		HARNESS, Alternator -(Tri Circuit)
1051	691265		RING, Retaining
1054	280275		TIE, Cable
1059	698516		KIT, Screw/Washer
1090	691293		RETAINER, Brush
1119	691183		SCREW -(Alternator)
1448	690260		WASHER -(Magneto Armature)

Not For Reproduction

Copyright © Briggs & Stratton. All Rights reserved

Camshaft, Crankshaft, Counterweight, Cylinder, Engine Sump, Gasket Set - Engine,

Mfg. No: 31P777-0299-E1

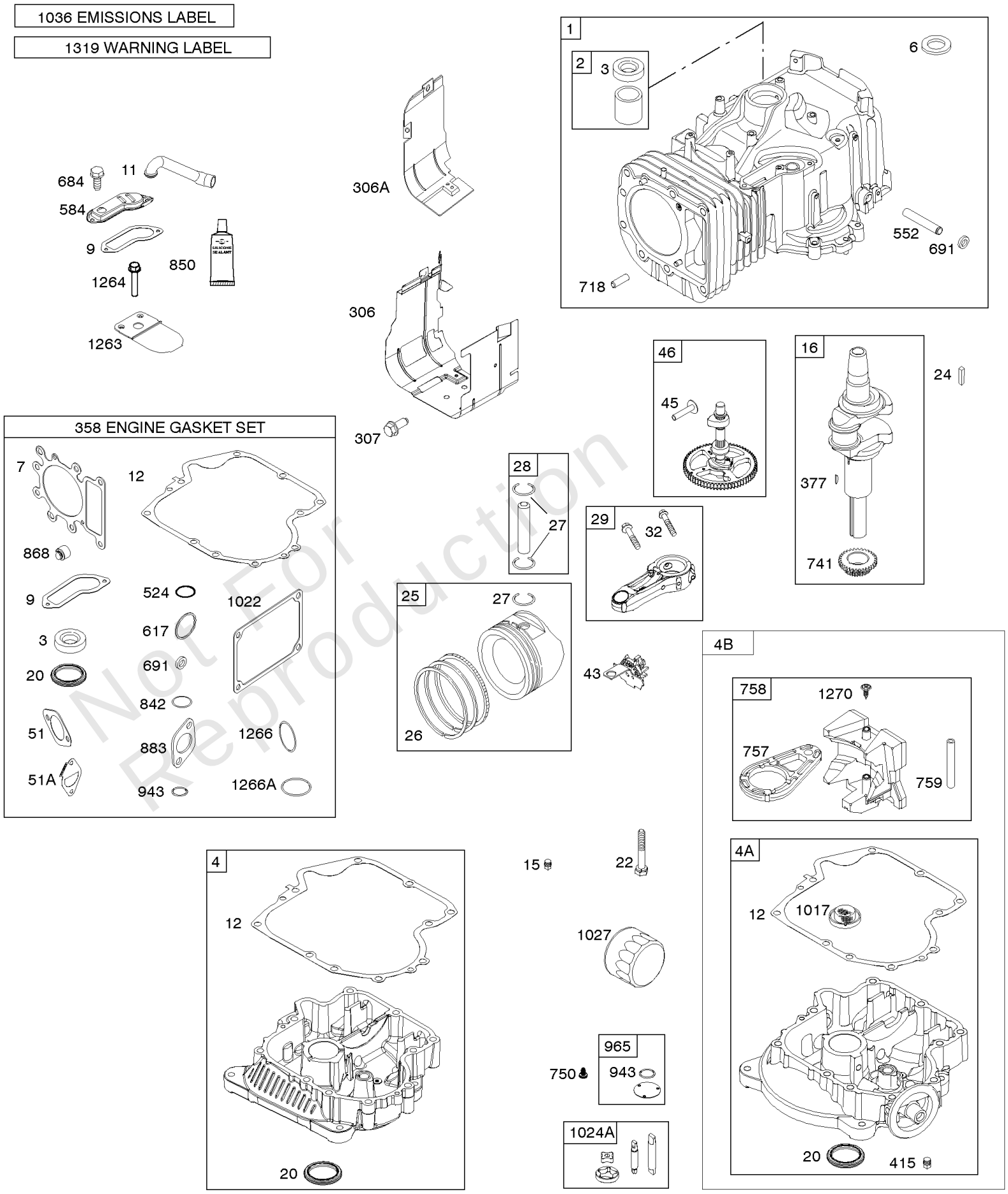

Not For Reproduction

REF NO	PART NO	QTY	DESCRIPTION
1	796010		CYLINDER ASSEMBLY
1	796010		CYLINDER ASSEMBLY -MUST BE USED WITH THE AFTER 4/27/08 CYLINDER SHIELD, REF 306 -Used Before Code Date 08042800
2	797673		KIT, Bushing/Seal -(Magneto Side)
3	391086S		SEAL, Oil -(Magneto Side)
4A	592849		SUMP, Engine -Used After Code Date 05100200
4B	795938		COUNTERWEIGHT -Used Before Code Date 05100300
6	690310		WASHER -(Cylinder Head) -Used After Code Date 07010900
7	796584		GASKET, Cylinder Head
9	697109		GASKET, Breather -(After Date Code Use Liquid Sealant Reference 850) -Used Before Code Date 07071900
11	794683		TUBE, Breather
12	697110		GASKET, Crankcase -(.015" Thick)(Standard)
15	690946		PLUG, Oil Drain -(Square Head)
15	691680		PLUG, Oil Drain -(Flush)
16	596006		CRANKSHAFT -(Angled Cut Keyway) -Used After Code Date 12071700
16	595339		CRANKSHAFT -(Straight Cut Keyway) -Used Before Code Date 12071800
20	795387		SEAL, Oil -(PTO Side)
22	692125		SCREW -(Crankcase Cover/Sump)
24	591757		KEY, Flywheel -Used After Code Date 12071700
24	796335		KEY, Flywheel -Used Before Code Date 12071800
25	594436		PISTON ASSEMBLY -(.020" Oversize)(Use with 1.97" Long Piston Pin) -Used After Code Date 14093000
25	796172		PISTON ASSEMBLY -(Use with 1.97 Long Piston Pin) -Used Before Code Date 14100100
25	796173		PISTON ASSEMBLY -(.020 Oversize)(Use with 1.97 Long Piston Pin) -Used Before Code Date 14100100
25	594435		PISTON ASSEMBLY -(Use with 1.97" Long Piston Pin) -Used After Code Date 14093000
26	697559		SET, Ring -(.020 Oversize)(Use with 1.97 Long Piston Pin) -Used Before Code Date 06010200
26	792649		SET, Ring -(.020 Oversize)(Use with 1.97 Long Piston Pin) -Used After Code Date 06010100 -Used Before Code Date 14100100
26	594437		RING SET -(Standard)

Not For Reproduction

Copyright © Briggs & Stratton. All Rights reserved

Camshaft, Crankshaft, Counterweight, Cylinder, Engine Sump, Gasket Set - Engine,

Mfg. No: 31P777-0299-E1

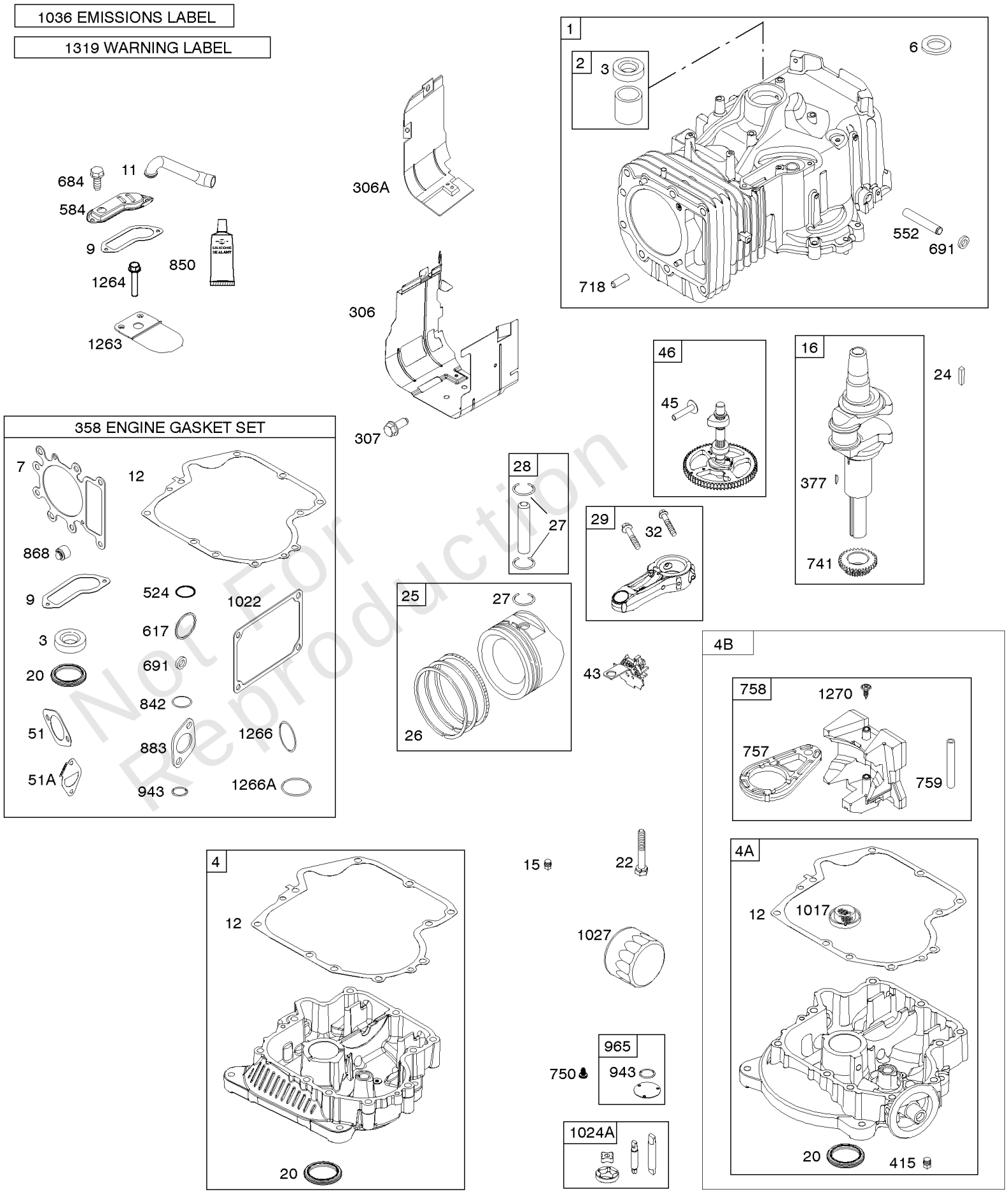

Not For Reproduction

Copyright © Briggs & Stratton. All Rights reserved

REF NO	PART NO	QTY	DESCRIPTION
26	594438		SET, Ring -(.020 Oversize)(Use with 1.97 Long Piston Pin) -Used After Code Date 14093000
27	698469		LOCK, Piston Pin
28	697099		PIN, Piston -(Use with 1.97 Long Piston Pin) -Used Before Code Date 08042800
28	594439		PIN, Piston -(1.62" Long) -Used After Code Date 14093000
28	796007		PIN, Piston -(1.97) -Used After Code Date 08042700 -Used Before Code Date 14100100
29	794122		ROD, Connecting -(Use with 1.97" Long Piston Pin)
32	791118		SCREW -(Connecting Rod)
43	691968		SLINGER, Governor/Oil
45	690564		TAPPET, Valve
46	793880		CAMSHAFT
51	692137		GASKET-INTAKE
51A	796081		GASKET, Intake
306	592777		SHIELD, Cylinder -Used After Code Date 08042700
306	697107		SHIELD, Cylinder -Used Before Code Date 08042800
306A	794953		SHIELD, Cylinder
307	691693		SCREW -(Cylinder Shield)
358	796187		GASKET SET, Engine
377	691639		KEY, Woodruff
415	794903		PLUG -(Sump)
524	691032		SEAL, O-Ring
552	697144		BUSHING, Governor Crank
584	794682		COVER, Breather Passage -(Use with Liquid Sealant Reference 850)
617	692138		SEAL, O-Ring -(Intake Manifold)
684	697157		SCREW -(Breather Passage Cover)
691	692407		SEAL, Governor Shaft
718	690959		PIN, Locating
741	697128		GEAR, Timing
750	790832		SCREW -(Oil Pump Cover)
757	793242		LINK, Counterweight
758	793763		COUNTERWEIGHT -Used After Code Date 05100200 -Used Before Code Date 14100100
758	795938		COUNTERWEIGHT -(Must Use Kit 795938, Includes Sump And Counterweight) -Used Before Code Date 05100300
758	-----		Counterweight -(Must Use Kit 795938, Includes Sump And Counterweight) -Used Before Code Date 05100300
758	594443		COUNTERWEIGHT -Used After Code Date 14093000

Not For Reproduction

Copyright © Briggs & Stratton. All Rights reserved

Camshaft, Crankshaft, Counterweight, Cylinder, Engine Sump, Gasket Set - Engine,

Mfg. No: 31P777-0299-E1

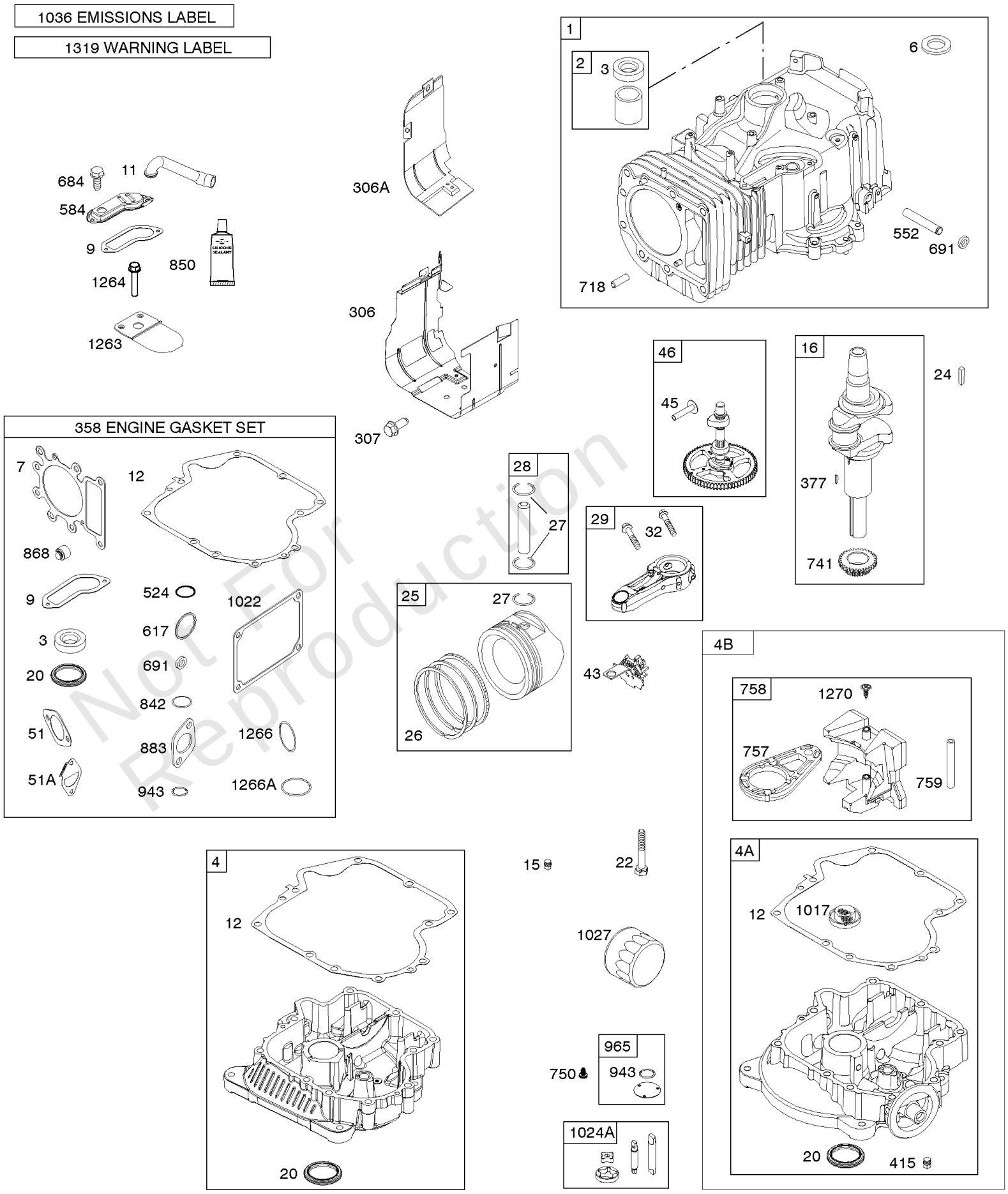

Not For Reproduction

Copyright © Briggs & Stratton. All Rights reserved

REF NO	PART NO	QTY	DESCRIPTION
759	697392		PIN, Counterweight
842	691031		SEAL, O-Ring -(Dipstick Tube)
850	100106		SEALANT, Liquid -(Rocker Cover Gasket and Breather Gasket)
868	690968		SEAL, Valve
883	692236		GASKET, Exhaust
943	690589		SEAL, O-Ring -(Oil Pump Cover)
965	499613		COVER, Oil Pump
1017	796981		SCREEN, Oil Pump
1022	272475S		GASKET, Rocker Cover -(After Date Code Use Liquid Sealant Reference 850) -Used Before Code Date 07091000
1024A	794644		PUMP-OIL
1027	696854		FILTER, Oil -(Premium)(Yellow)
1027	492932S		FILTER, Oil -(Standard)(Black)
1036	-----		Label-Emissions -(Available From A Briggs & Stratton Authorized Dealer)
1263	697124		REED, Breather
1264	697104		SCREW -(Breather Reed)
1266	691917		SEAL, O-Ring -(Intake Elbow)
1266A	697123		SEAL, O-Ring -(Intake Elbow)
1270	793243		PLUG, AVS Counterweight
1319	794467		LABEL, Warning

Not For Reproduction

Copyright © Briggs & Stratton. All Rights reserved

Carburetor, Kit - Carburetor Overhaul

Mfg. No: 31P777-0299-E1

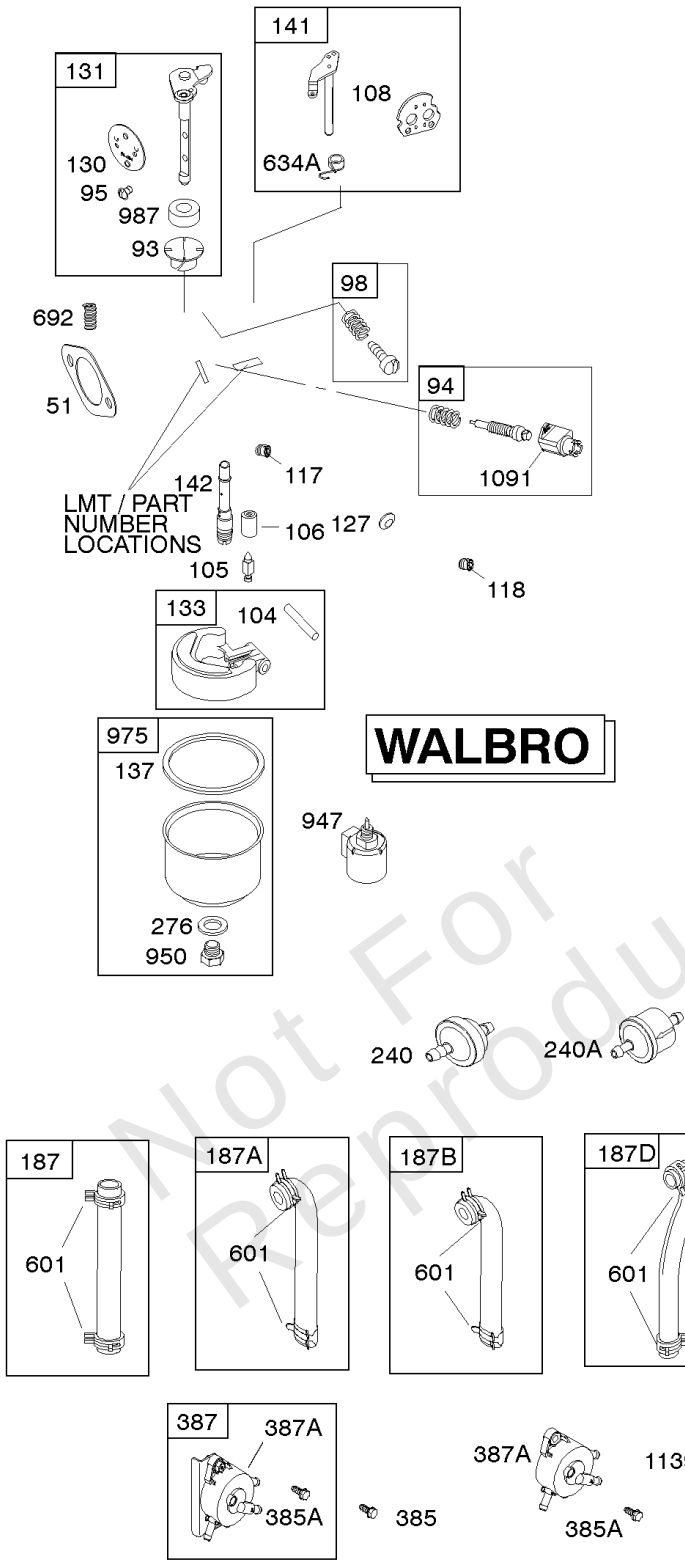

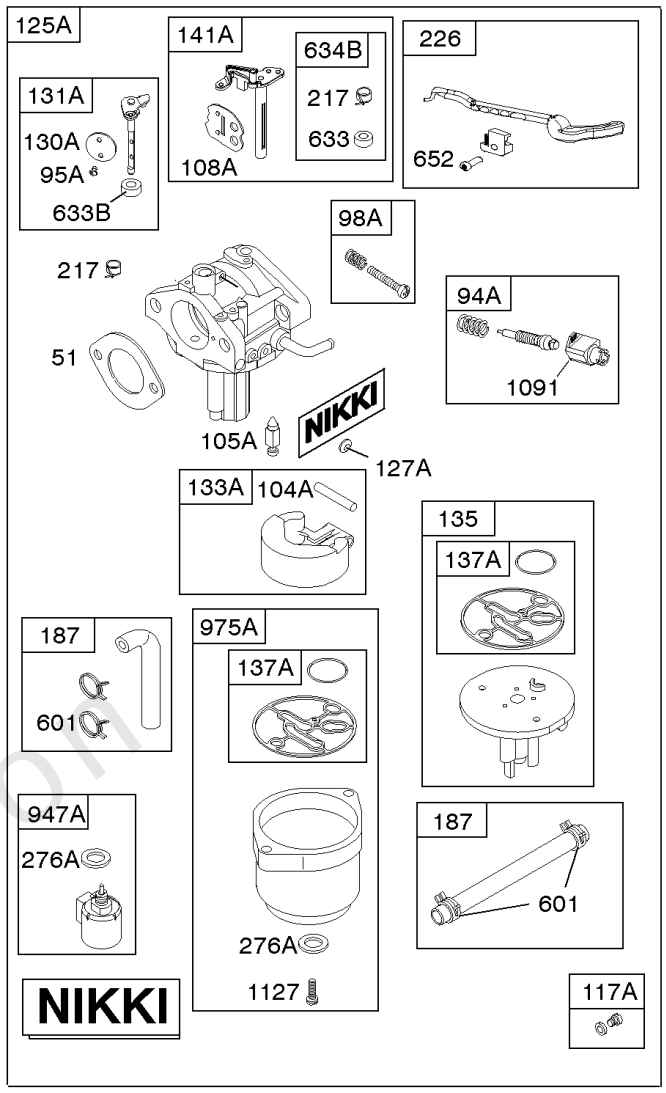

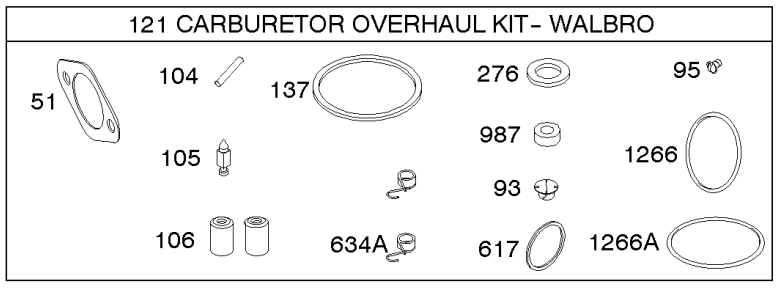

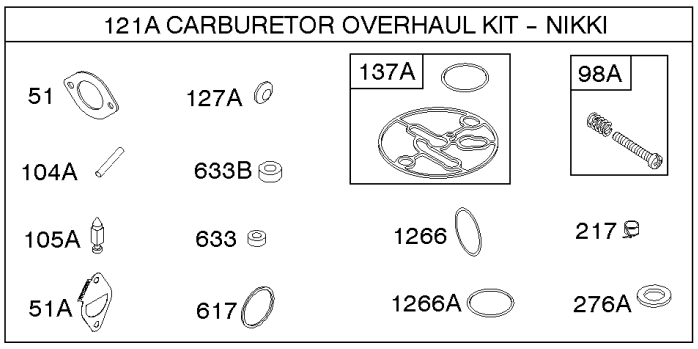

Not For Reproduction

REF NO	PART NO	QTY	DESCRIPTION
51	692137		GASKET-INTAKE
51A	796081		GASKET, Intake
93	690602		BUSHING, Throttle Shaft
94	794176		KIT, Idle Mixture -(Walbro)
94A	793610		KIT, Idle Mixture -(No Longer Available, For Replacement See Reference 125B)
95	691636		SCREW -(Throttle Valve) (Walbro)
95A	690718		SCREW -(Throttle Valve) (No Longer Available, For Replacement See Reference 125B) -Used Before Code Date 15113000
98	495800		KIT, Idle Speed -(Walbro)
98A	695408		KIT, Idle Speed -(No Longer Available, For Replacement See Reference 125B) -Used Before Code Date 15113000
104	690525		PIN, Float Hinge -(Walbro)
104A	694918		PIN, Float Hinge -(No Longer Available, For Replacement See Reference 125B) -Used Before Code Date 15113000
105	231855S		VALVE-FLOAT NEEDLE -(Walbro)
105A	696136		VALVE, Float Needle -(No Longer Available, For Replacement See Reference 125B) -Used Before Code Date 15113000
106	691780		SEAT, Inlet -(Pump Feed)
106	690577		SEAT, Inlet -(Gravity Feed)
108	692344		VALVE, Choke -(Walbro)
108A	695419		VALVE, Choke -(, For Replacement See Reference 125B) -Used Before Code Date 15113000
117A	699732		JET, Main -(Standard) -Used Before Code Date 08051400
117A	699457		JET, Main -(Standard) -Used After Code Date 08051300
118A	699458		JET, Main -(High Altitude) -Used Before Code Date 08051400
118A	695415		JET, Main -(High Altitude) -Used After Code Date 08051300
121	697241		KIT, Carburetor Overhaul -(Walbro Carburetor)
121A	796184		KIT, Carburetor Overhaul -(Nikki Carburetor) -Used Before Code Date 15113000
125A	794572		CARBURETOR -Used Before Code Date 08051400
125A	591731		CARBURETOR -Used After Code Date 08051300
127	695005		PLUG, Welch -(5/16 Diameter)
127A	690727		PLUG, Welch -(No Longer Available, For Replacement See Reference 125B)

Not For Reproduction

Copyright © Briggs & Stratton. All Rights reserved

Carburetor, Kit - Carburetor Overhaul

Mfg. No: 31P777-0299-E1

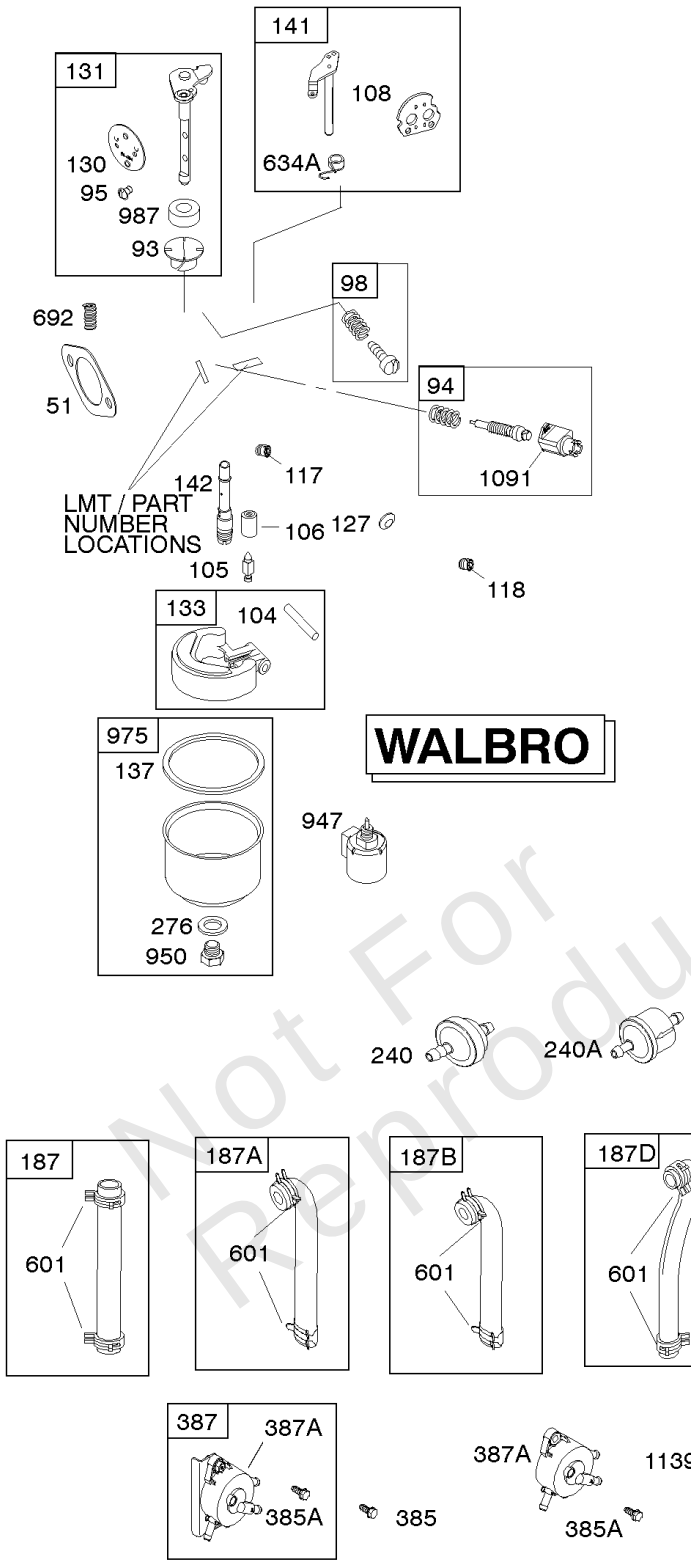

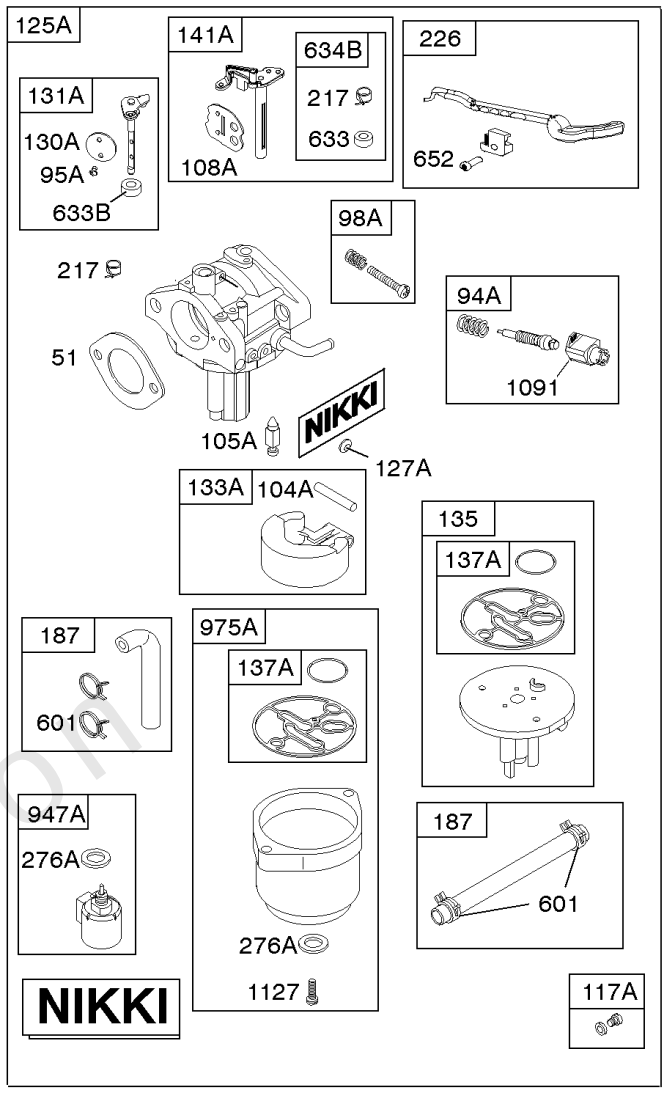

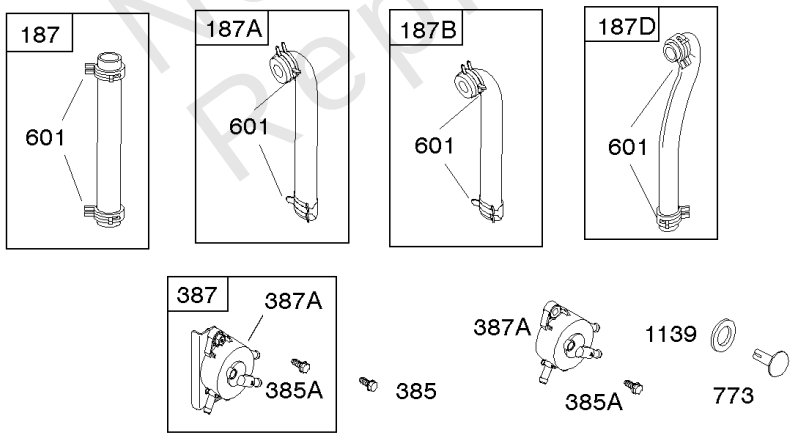

121 CARBURETOR OVERHAUL KIT– WALBRO

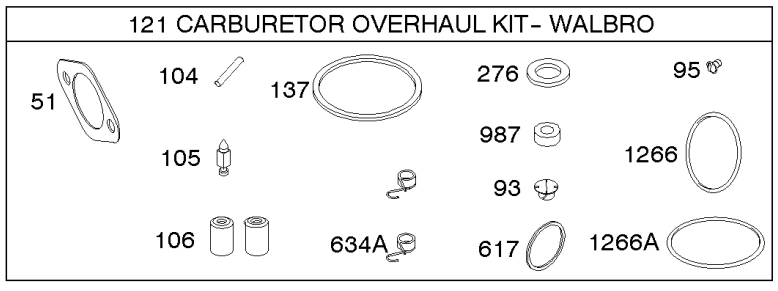

121A CARBURETOR OVERHAUL KIT – NIKKI

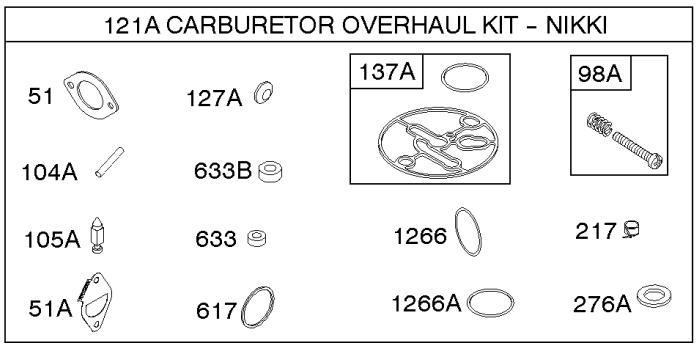

Not For Reproduction

Copyright © Briggs & Stratton. All Rights reserved

REF NO	PART NO	QTY	DESCRIPTION
130	691750		VALVE, Throttle -(Walbro)
130A	699500		VALVE, Throttle -(, For Replacement See Reference 125B) -Used Before Code Date 15113000
131	790901		KIT, Throttle Shaft -(Walbro)
131A	699501		KIT, Throttle Shaft -(, For Replacement See Reference 125B) -Used Before Code Date 15113000
133	494381		FLOAT, Carburetor -(Walbro)
133A	694914		FLOAT, Carburetor -(No Longer Available, For Replacement See Reference 125B) -Used Before Code Date 15113000
135	698780		TUBE, Fuel Transfer -(Nikki)(Gravity Feed)(Does Not Include Jet)
135	796400		TUBE, Fuel Transfer -(Pump Feed Carburetor) -Used After Code Date 13071800
135	792022		TUBE-FUEL TRANSFER -(Pump Feed)(Does Not Include Jet) -Used Before Code Date 13071900
137	281165S		GASKET, Float Bowl -(Walbro)
137A	698781		GASKET, Float Bowl -(No Longer Available, For Replacement See Reference 125B) -Used Before Code Date 15113000
141	790902		KIT, Choke Shaft
141A	792777		KIT, Choke Shaft -(, For Replacement See Reference 125B) -Used Before Code Date 15113000
142	697140		NOZZLE, Carburetor
187	791766		LINE, Fuel -(Straight)(Cut To Required Length)
187A	791806		LINE, Fuel -(Formed)(21)(Cut to Required Length)
187B	791805		LINE, Fuel -(Formed)(Cut To Required Length)
187D	791744		LINE, Fuel -(Formed)(14 Inches Long)(Cut To Required Length)
217	695409		SPRING, Choke Return -(No Longer Available, For Replacement See Reference 125B) -Used Before Code Date 15113000
226	793386		KIT, Choke Shaft
240	394358S		FILTER, Fuel -(White, 75 Microns)
240A	84001895		FILTER, Fuel -(Includes Paper Element With A 40 Micron Rating)
276	692255		WASHER, Sealing -(Walbro)
276A	695410		WASHER, Sealing -(No Longer Available, For Replacement See Reference 125B) -Used Before Code Date 15113000
385	694476		SCREW -(Fuel Pump)
385A	690297		SCREW -(Fuel Pump)
387	697090		PUMP, Fuel -Used Before Code Date 08082500
387A	808656		PUMP, Fuel -Used After Code Date 08082400

Not For Reproduction

Copyright © Briggs & Stratton. All Rights reserved

Carburetor, Kit - Carburetor Overhaul

Mfg. No: 31P777-0299-E1

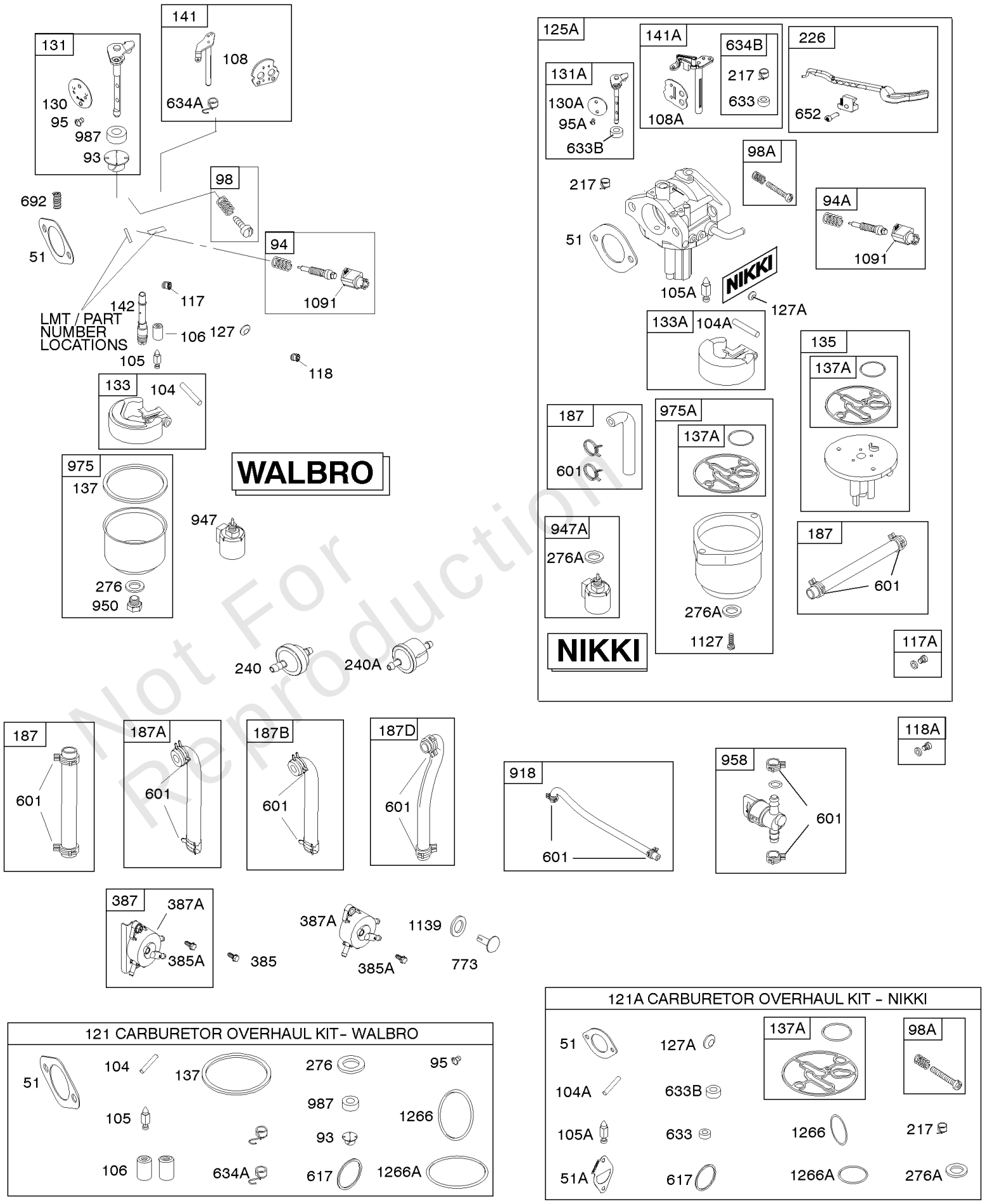

Not For Reproduction

Copyright © Briggs & Stratton. All Rights reserved

Carburetor, Kit - Carburetor Overhaul

REF NO	PART NO	QTY	DESCRIPTION
601	791850		CLAMP, Hose -(Green)
617	692138		SEAL, O-Ring -(Intake Manifold)
633	699813		SEAL, Choke/Throttle Shaft
633B	690998		SEAL, Choke/Throttle Shaft -(No Longer Available, For Replacement See Reference 125B) -Used Before Code Date 15113000
634A	690802		SPRING/SEAL ASSEMBLY -(Walbro)
634B	698779		SPRING/SEAL ASSEMBLY -(, For Replacement See Reference 125B)
652	793380		SCREW -(Support Bracket)
692	590931		SPRING, Detent
773	796448		RETAINER
918	791851		HOSE, Vacuum
947	694393		SOLENOID, Fuel -(Walbro)
947A	699915		SOLENOID, Fuel -(, For Replacement See Reference 125B) -Used Before Code Date 15113000
950	691657		SCREW -(Float Bowl)
958	698183		VALVE, Fuel Shut Off
975	495933		BOWL, Float -(Float Bowl)
975A	699502		BOWL, Float -(No Longer Available, For Replacement See Reference 125B) -Used Before Code Date 15113000
987	691326		SEAL, Choke/Throttle Shaft
1091	691333		CAP, Limiter
1127	695407		SCREW -(Float Bowl) (Float Bowl to Carburetor Body)
1139	796449		WASHER -(Fuel Pump Bracket)
1266	691917		SEAL, O-Ring -(Intake Elbow)
1266A	697123		SEAL, O-Ring -(Intake Elbow)

Not For Reproduction

Copyright © Briggs & Stratton. All Rights reserved

Cylinder Head, Gasket Set - Valve, Intake Manifold, Lubrication, Valves

Mfg. No: 31P777-0299-E1

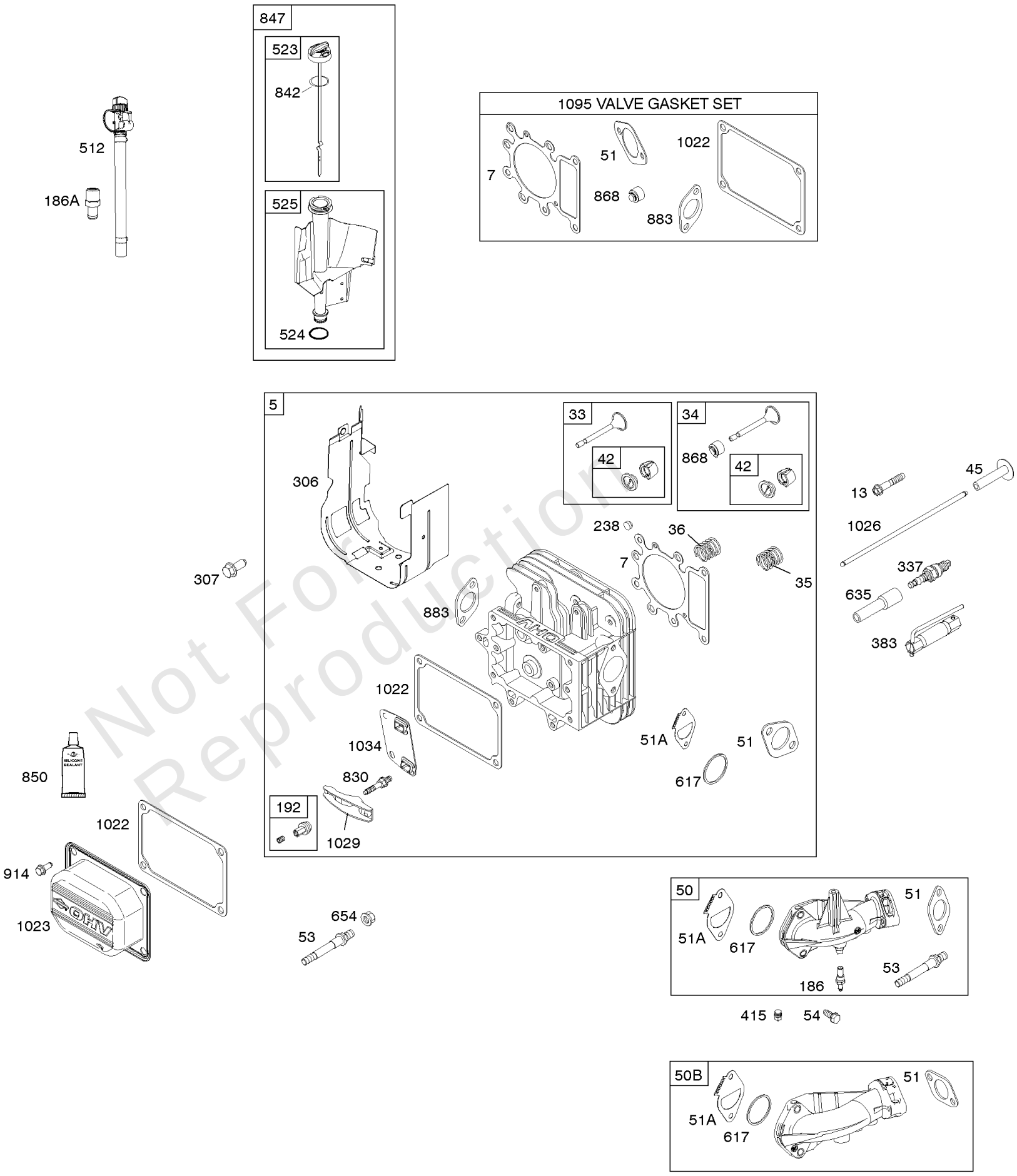

Not For Reproduction

Cylinder Head, Gasket Set - Valve, Intake Manifold, Lubrication, Valves

REF NO	PART NO	QTY	DESCRIPTION
5	796026		HEAD-CYLINDER
7	796584		GASKET, Cylinder Head
13	592244		SCREW -(Cylinder Head) (5/16-18 x 2.69) -Used After Code Date 07010900
13	690360		SCREW -(Cylinder Head) (5/16-18 x 2.25) -Used Before Code Date 07011000
33	792868		VALVE, Exhaust
34	791935		VALVE, Intake
35	691279		SPRING, Valve -(Intake)
36	691279		SPRING, Valve -(Exhaust)
42	499586		KEEPER, Valve
45	690564		TAPPET, Valve
50	591248		MANIFOLD, Intake
50B	592842		MANIFOLD-INTAKE
51	692137		GASKET-INTAKE
51A	796081		GASKET, Intake
53	591260		STUD -(Carburetor) -Used After Code Date 11121800
53	690227		STUD -(Carburetor) -Used Before Code Date 11121900
54	691148		SCREW -(Intake Manifold)
186	794873		CONNECTOR, Hose
186A	796532		CONNECTOR, Hose
192	691986		ADJUSTER, Rocker Arm
238	691843		CAP, Valve
306	592777		SHIELD, Cylinder -Used After Code Date 08042700
306	697107		SHIELD, Cylinder -Used Before Code Date 08042800
307	691693		SCREW -(Cylinder Shield)
337	691043		PLUG, Spark
383	89838S		WRENCH-SPARK PLUG
415	794903		PLUG -(Sump)
512	594200		HOSE, Oil Drain
523	699908		DIPSTICK
524	691032		SEAL, O-Ring
525	697184		TUBE, Dipstick
617	692138		SEAL, O-Ring -(Intake Manifold)
635	691909		BOOT, Spark Plug
654	690958		NUT -(Carburetor)
830	691095		STUD, Rocker Arm
842	691031		SEAL, O-Ring -(Dipstick Tube)
847	790442		DIPSTICK/TUBE ASSEMBLY
850	100106		SEALANT, Liquid -(Rocker Cover Gasket and Breather Gasket)

Not For Reproduction

Copyright © Briggs & Stratton. All Rights reserved

Cylinder Head, Gasket Set - Valve, Intake Manifold, Lubrication, Valves

Mfg. No: 31P777-0299-E1

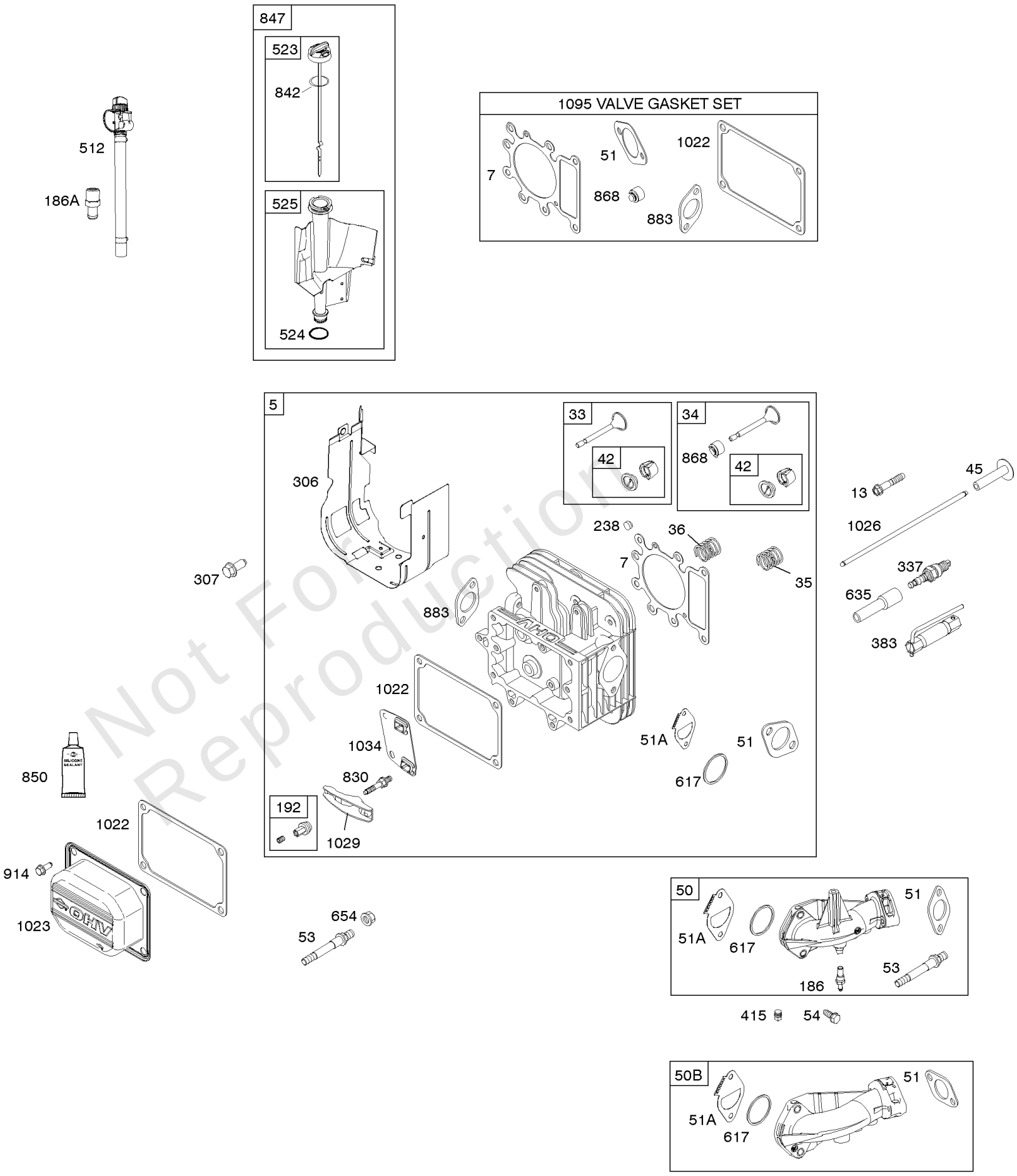

Not For Reproduction

Cylinder Head, Gasket Set - Valve, Intake Manifold, Lubrication, Valves

REF NO	PART NO	QTY	DESCRIPTION
868	690968		SEAL, Valve
883	692236		GASKET, Exhaust
914	691108		SCREW -(Rocker Cover)
1022	272475S		GASKET, Rocker Cover -(After Date Code Use Liquid Sealant Reference 850) -Used Before Code Date 07091000
1023	797421		COVER-ROCKER
1026	692011		ROD, Push -(Exhaust)
1026	692003		ROD, Push -(Intake)
1029	691751		ARM, Rocker
1034	690822		GUIDE, Push Rod
1095	794152		GASKET SET, Valve

Not For Reproduction

Flywheel

Mfg. No: 31P777-0299-E1

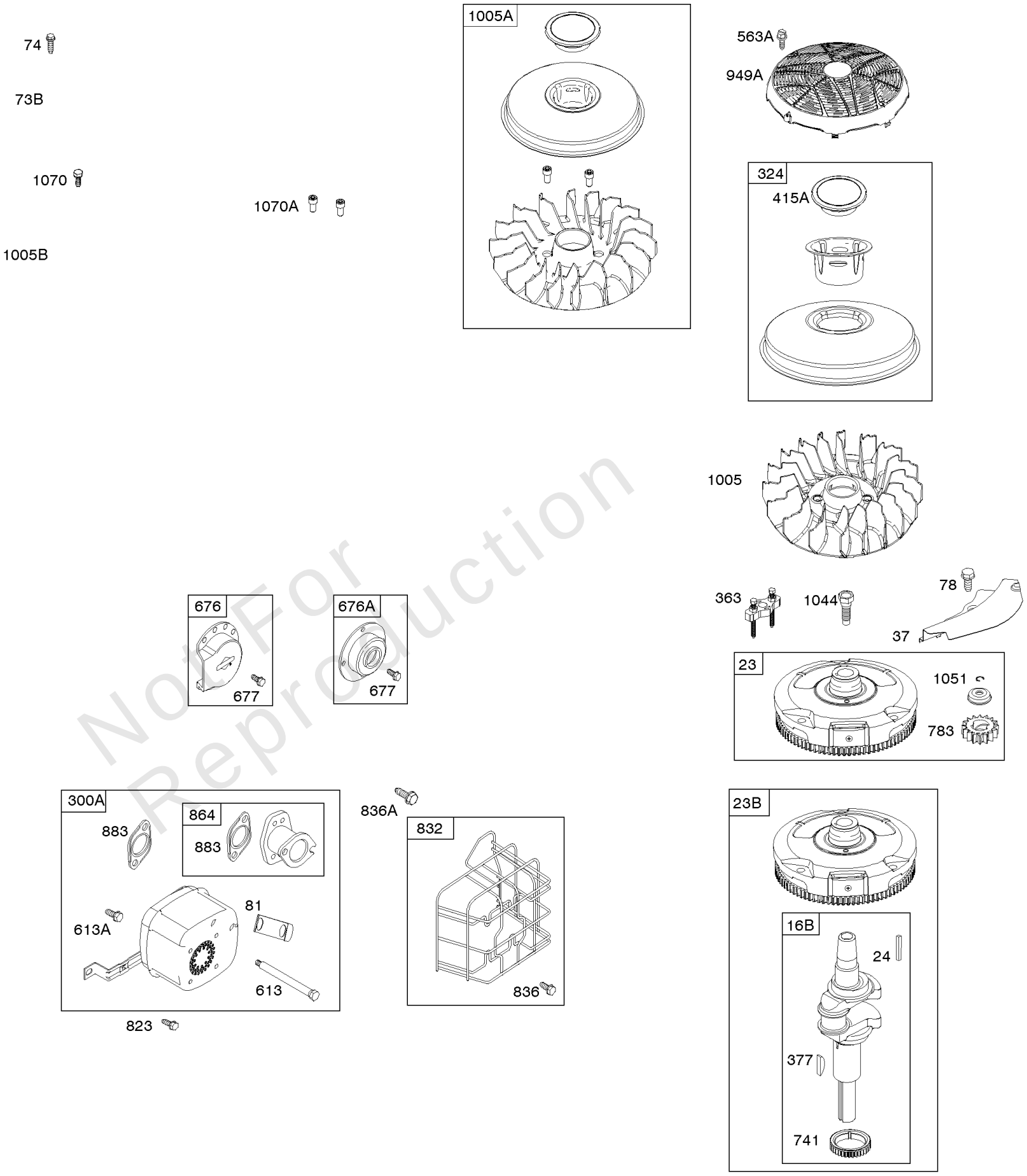

Not For Reproduction

Flywheel

REF NO	PART NO	QTY	DESCRIPTION
16B	596006		CRANKSHAFT -(Angled Cut Keyway)
23	693557		FLYWHEEL -Used Before Code Date 12071800
23	591761		FLYWHEEL -Used After Code Date 12071700
24	796335		KEY, Flywheel -Used Before Code Date 12071800
24	591757		KEY, Flywheel -Used After Code Date 12071700
37	697352		GUARD, Flywheel
73B	-----		Screen-Rotating -(No Longer Available)(See Reference 1005A for Service Flywheel Fan) -Used Before Code Date 07040900
74	697897		SCREW -(Rotating Screen) -Used Before Code Date 07040900
78	691693		SCREW -(Flywheel Guard)
81	691178		LOCK, Muffler Screw
300A	795998		MUFFLER
363	19203		PULLER, Flywheel
377	691639		KEY, Woodruff
415A	794129		COVER, Flywheel -(Cover/Retainer) -Used After Code Date 07040800
563A	799359		SCREW -(Debris Screen Guard)
613	691416		SCREW -(Muffler) (Muffler)
613A	691678		SCREW -(Muffler) (Muffler)
676	795036		DEFLECTOR, Muffler
676A	396903		DEFLECTOR, Muffler -(Direct Out)
677	690661		SCREW -(Muffler Deflector)
741	697128		GEAR, Timing
783	593935		GEAR, Pinion
823	698941		SCREW -(Muffler Adapter)
832	790293		GUARD, Muffler
836	691676		SCREW -(Muffler Guard)
836A	690367		SCREW -(Muffler Guard)
864	796002		ADAPTER, Muffler -(2 1/4" Long)
883	692236		GASKET, Exhaust
949A	799358		GUARD, Debris Screen
1005	796083		FAN, Flywheel -Used After Code Date 07040800
1005A	796201		FAN-FLYWHEEL -Used Before Code Date 07040900
1005B	-----		Fan-Flywheel -(No Longer Available)(See Reference 1005A for Service Flywheel Fan)
1044	698139		SCREW -(Flywheel)

Not For Reproduction

Flywheel

Mfg. No: 31P777-0299-E1

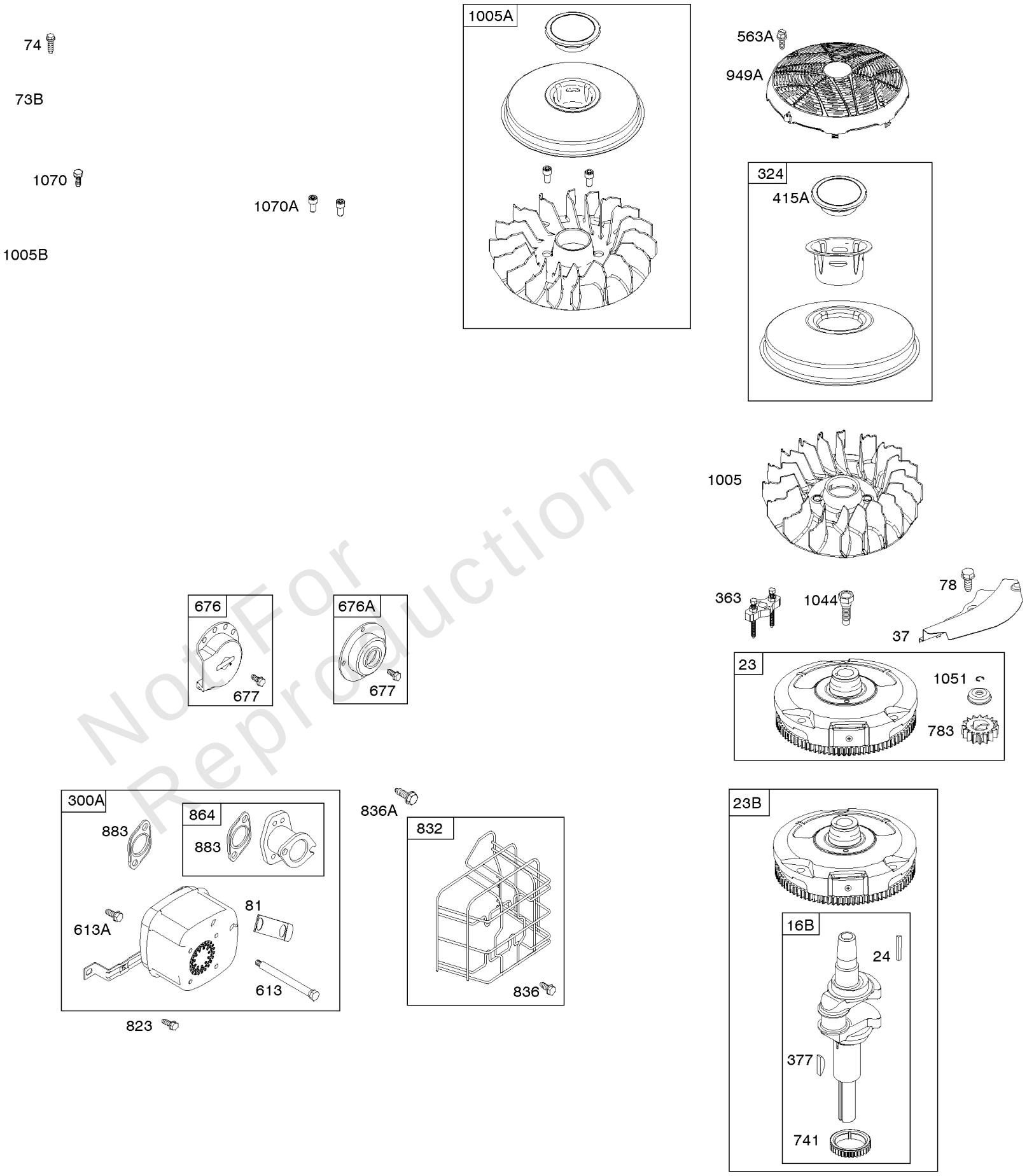

Not For Reproduction

Flywheel

REF NO	PART NO	QTY	DESCRIPTION
1051	691265		RING, Retaining
1070	791680		SCREW -(Flywheel Fan) -Used Before Code Date 07040900
1070A	690363		SCREW -(Flywheel Fan) -Used After Code Date 07040800 -Used Before Code Date 08061000

Not For Reproduction

Copyright © Briggs & Stratton. All Rights reserved

Replacement Engine - US & Canada

REF NO	PART NO	QTY	DESCRIPTION
	31Q7773136	1	Replacement Engine
	592060	1	Replacement Short Block
	-----		Top No-Load Speed: 3300 -Trim: ALL
	-----		Short Block Note: Engines Built Prior to 07/12/2012 should use short block 697762. Engines built on or after 07/12/2012 should use short block 592060.

Not For Reproduction

Copyright © Briggs & Stratton. All Rights reserved