Parts Manual

Mfg. No: 42A707-2238-E1

Copyright © Briggs & Stratton. All Rights reserved

24-Apr-2024

Model Components

Page

Air Cleaner, Muffler. 4
Alternator, Controls, Electrical, Governor Spring, Ignition, Kits/Gaskets-Engine. 6
Blower Housing. 10
Cam, Crankcase Cover, Crankshaft, Cylinder Head, Pistons, Valves. 12
Carburetor. 18
Carburetor, Kits/Gaskets-Carburetor. 22
Electric Starter. 24
Flywheel. 28
Oil Group. 30
Replacement Engine - US & Canada. 32
Sump. 33

Not For Reproduction

Copyright © Briggs & Stratton. All Rights reserved

Mfg. No: 42A707-2238-E1

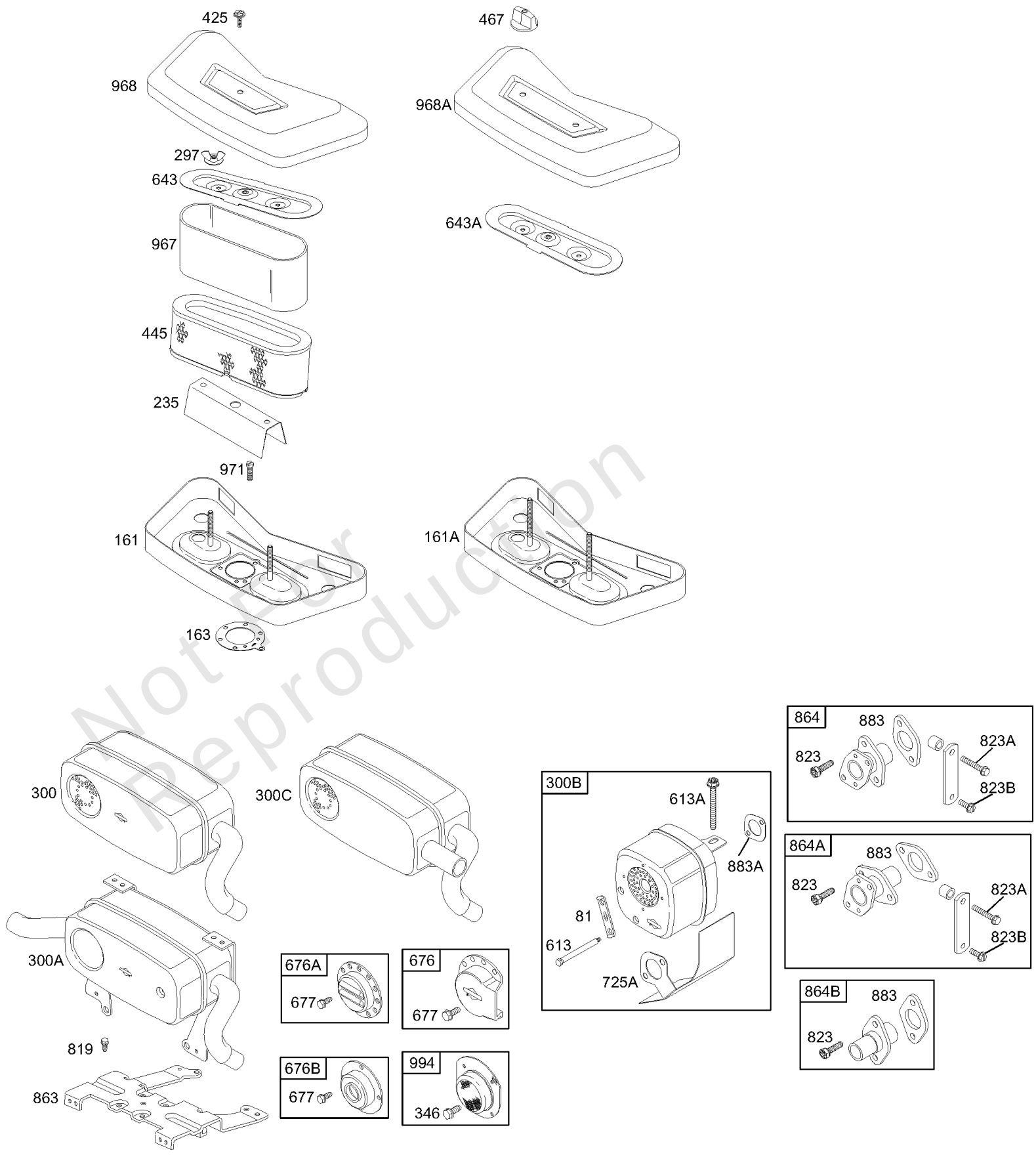

Not for Reproduction

Illustrations cover a range of engines. Parts shown without corresponding text may not be used on your specific engine.
Assemblies include all parts shown in frames.

Copyright © Briggs & Stratton. All Rights reserved

Air Cleaner, Muffler

REF NO	PART NO	QTY	DESCRIPTION
81	691178		LOCK, Muffler Screw
161	691401		BASE, Air Cleaner -(Metal)
163	690273		GASKET, Air Cleaner -(Air Cleaner)
235	691206		SHIELD, Fuel Spray
297	691331		NUT -(Air Filter)
300A	690838		MUFFLER -(Super Lo Tone)
300B	399635		MUFFLER -(Square Lo Tone)
300	491319S		MUFFLER -(Super Lo Tone)
346	690661		SCREW
425	691675		SCREW -(Air Cleaner Cover)
445	394019S		FILTER, A/C Cartridge
613A	690810		SCREW
613	691416		SCREW
643	496700		RETAINER, Air Filter
676	393761		DEFLECTOR, Muffler -(Side Outlet)
677	690661		SCREW
725A	690420		SHIELD, Heat
819	690297		SCREW -(Regulator)
823A	691648		SCREW -(Muffler Adapter)
823B	690316		SCREW -(Casing Clamp)
823	691681		SCREW
863	690444		BRACKET, Muffler
864A	691365		ADAPTER, Muffler -(Cylinder 2)
864B	691970		ADAPTER, Muffler
864	691975		ADAPTER, Muffler -(Cylinder 1)
883A	692236		GASKET, Exhaust
883	692282		GASKET, Exhaust
967	272490S		FILTER, Pre Cleaner
968	691207		COVER, Air Cleaner
971	691100		SCREW -(Air Cleaner Base)
994	392390		ARRESTOR, Spark

Not For Reproduction

Copyright © Briggs & Stratton. All Rights reserved

Alternator, Controls, Electrical, Governor Spring, Ignition, Kits/Gaskets-Engine

Mfg. No: 42A707-2238-E1

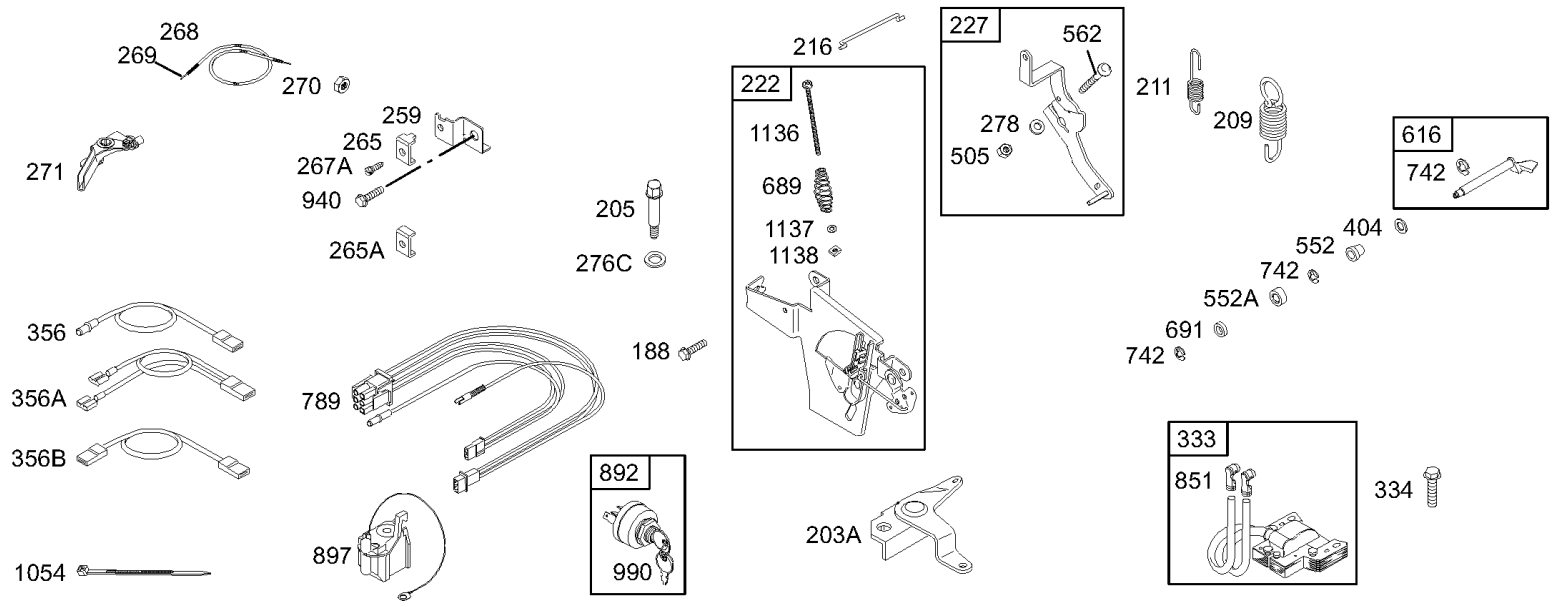

AC ONLY	DC ONLY	DUAL CIRCUIT	TRI CIRCUIT	9 AMP	10 AMP	16 AMP
474	474A	474B	474C	474C	474D	474D
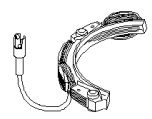	877A 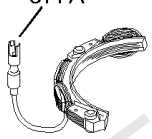	877	877B	877B	877C	877C
578 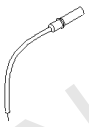	578 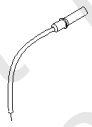	878	878A 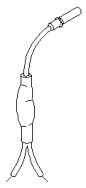	578 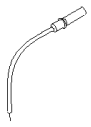	578 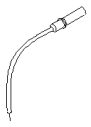	578 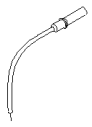
NOTE: *All Stators Use No. 1119 Mounting Screw.* ***NOTE:*** *The proper flywheel part number and/or the alternator magnet size will determine the alternator type or output. See repair instruction manual for additional information.*				526A 501A	526 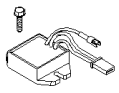 501	

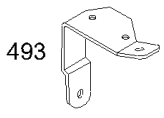

1095 VALVE GASKET SET

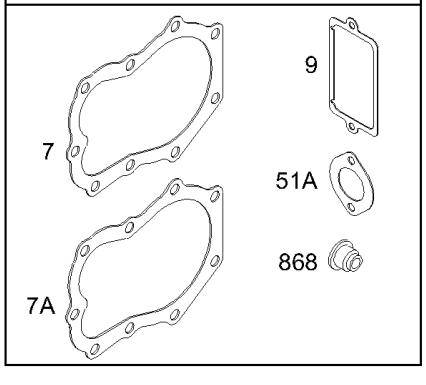

358 ENGINE GASKET SET

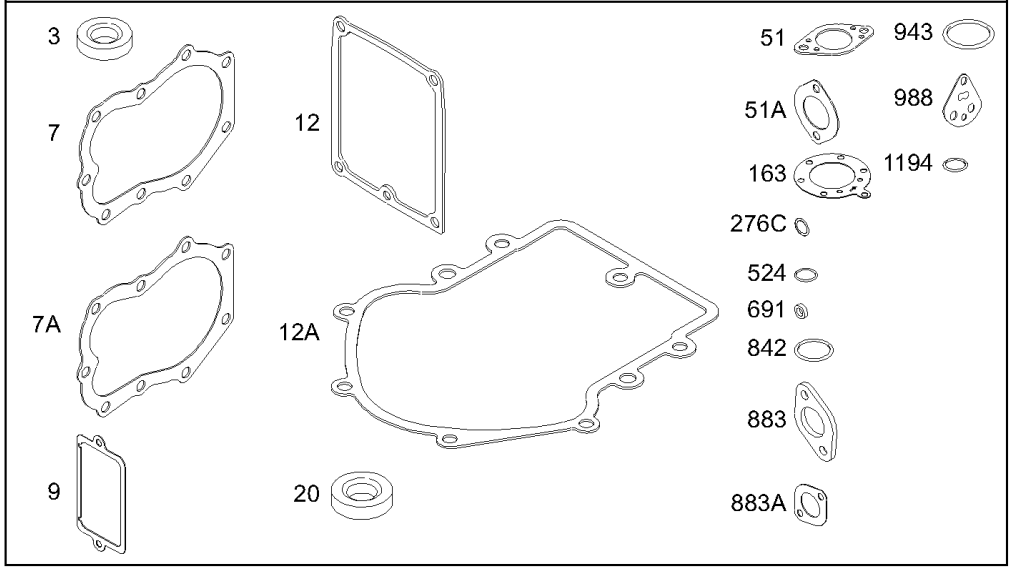

Illustrations cover a range of engines. Parts shown without corresponding text may not be used on your specific engine.
Assemblies include all parts shown in frames.

Not For Reproduction

Copyright © Briggs & Stratton. All Rights reserved

REF NO	PART NO	QTY	DESCRIPTION
3	391086S		SEAL, Oil
7A	271868S		GASKET, Cylinder Head -(Cylinder 2)
7	271867S		GASKET, Cylinder Head -(Cylinder 1)
9	27803S		GASKET, Breather
12A	271188		GASKET, Crankcase -(.005)
12A	271189		GASKET, Crankcase -(.009)
12A	692292		GASKET, Crankcase -(.015)
12	692287		GASKET, Crankcase
20	291675S		SEAL, Oil -(PTO Side)
51A	692219		GASKET, Intake
51	692278		GASKET, Intake
163	690273		GASKET, Air Cleaner -(Air Cleaner)
188	691003		SCREW
205	690322		SCREW -(Bell Crank)
209	691273		SPRING, Governor -(Orange)
211	691807		SPRING, Governed Idle
222	691366		BRACKET, Control
227	690762		LEVER, Governor Control
259	690437		BRACKET, Casing Clamp
265	691024		CLAMP, Casing
267A	690804		SCREW -(Casing Clamp)
268	691025		CASING, Control Wire
269	691026		WIRE, Control
270	691027		NUT
271	691028		LEVER, Control
276C	691319		WASHER, Sealing -(Carburetor Plug)
278	692810		WASHER -(Governor Lever)
333	394891		ARMATURE, Magneto -(Magnetron Ignition)
334	691061		SCREW
356A	491391		WIRE, Stop
356B	691423		WIRE, Stop
356	690807		WIRE, Stop
358	495868		GASKET SET, Engine
404	690442		WASHER
474C	691065		ALTERNATOR -(Tri Circuit)
474D	691064		ALTERNATOR -(10 Amp Regulated)
474B	691063		ALTERNATOR -(Dual Circuit)
493	690416		BRACKET-MOUNTING
501A	691188		REGULATOR -(9 Amp Regulated)

Not For Reproduction

Copyright © Briggs & Stratton. All Rights reserved

Alternator, Controls, Electrical, Governor Spring, Ignition, Kits/Gaskets-Engine

Mfg. No: 42A707-2238-E1

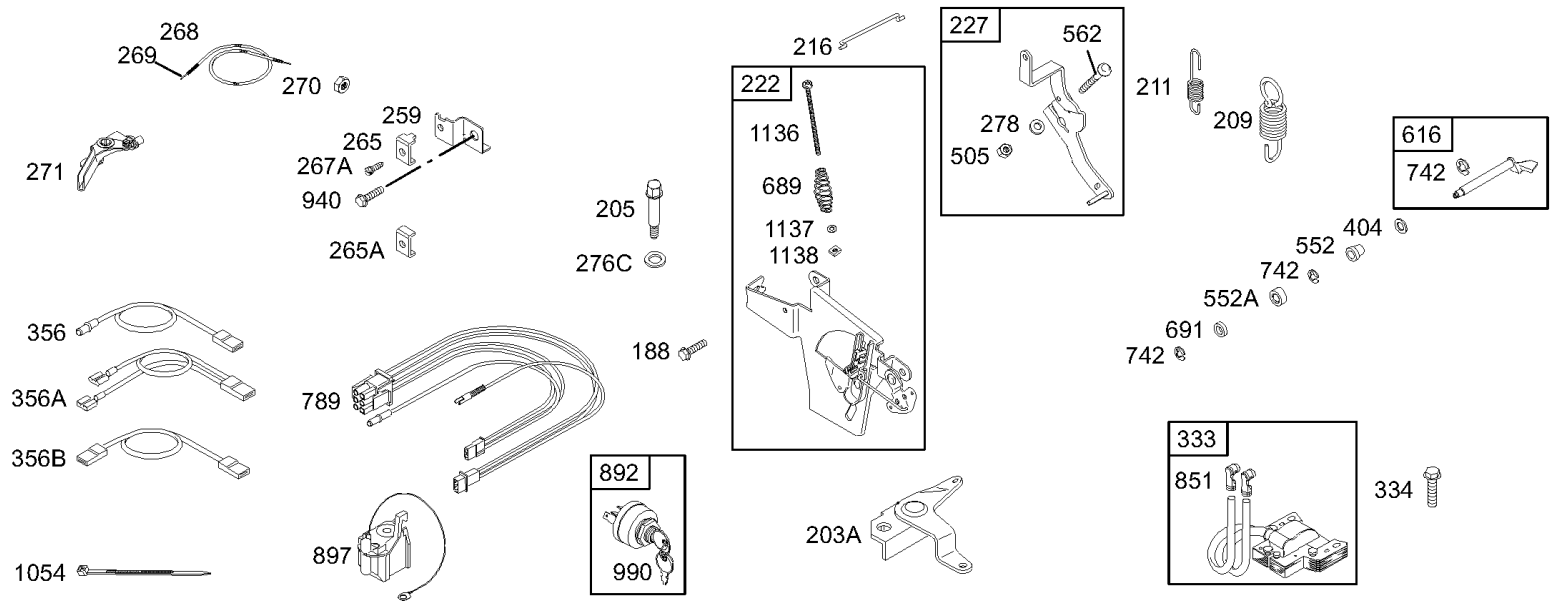

AC ONLY	DC ONLY	DUAL CIRCUIT	TRI CIRCUIT	9 AMP	10 AMP	16 AMP
474	474A	474B	474C	474C	474D	474D
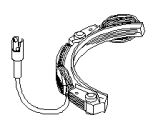	877A 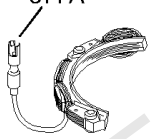	877	877B	877B	877C	877C
578 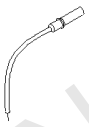	578 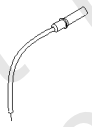	878	878A 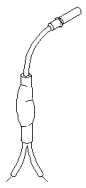	578 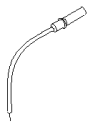	578 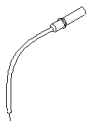	578 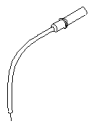
NOTE: *All Stators Use No. 1119 Mounting Screw.* ***NOTE:*** *The proper flywheel part number and/or the alternator magnet size will determine the alternator type or output. See repair instruction manual for additional information.*				526A 501A	526 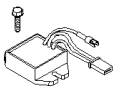 501	

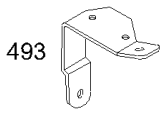

1095 VALVE GASKET SET

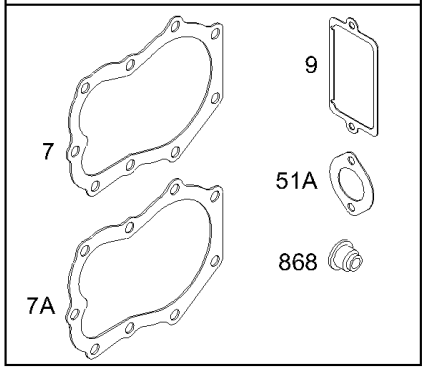

358 ENGINE GASKET SET

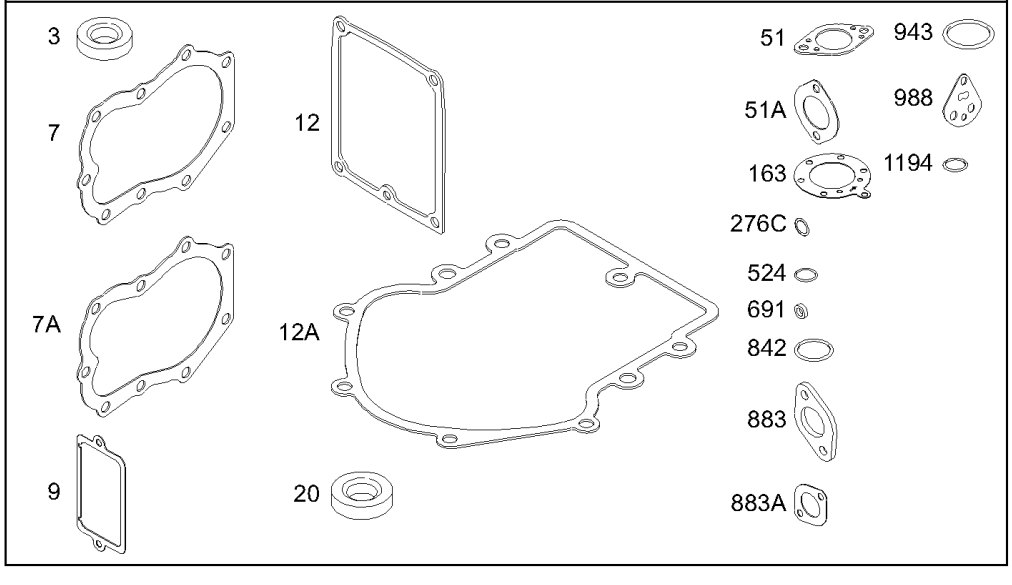

Illustrations cover a range of engines. Parts shown without corresponding text may not be used on your specific engine.
Assemblies include all parts shown in frames.

Not For Reproduction

Copyright © Briggs & Stratton. All Rights reserved

REF NO	PART NO	QTY	DESCRIPTION
501	691185		REGULATOR -(16 Amp Regulated)
505	691029		NUT
524	692532		SEAL, O-Ring -(Dipstick Tube)
526A	690326		SCREW
526	690297		SCREW -(Regulator)
552A	690552		BUSHING-GOV CRANK
552	690553		BUSHING, Governor Crank
562	690311		BOLT
578	692306		WIRE ASSEMBLY
616	491530		CRANK, Governor
689	690555		SPRING, Friction
691	690657		SEAL, Governor Shaft
742	690328		RETAINER, E Ring
789	695050		HARNESS, Wiring
842	271170		SEAL, O-Ring -(Dipstick Tube)
851	493880S		TERMINAL-SPARK PLUG
868	692324		SEAL, Valve -(Black)
877A	399916		WIRE/CONN-ALTERNATOR
877B	393537		WIRE/CONNECTOR, Alternator -(Tri Circuit) (9 Amp)
877	393456		WIRE/CONNECTOR, Alternator
878A	691955		HARNESS, Alternator
878	691237		HARNESS, Alternator
883A	692236		GASKET, Exhaust
883	692282		GASKET, Exhaust
943	690589		SEAL, O-Ring
988	691313		GASKET, Oil Adapter
1054	280275		TIE, Cable
1095	498047		GASKET SET, Valve
1119	691183		SCREW
1136	690329		SCREW -(Control Bracket) (High Speed Control)
1137	690390		WASHER -(Control Bracket) (High Speed Control)
1138	690330		NUT -(Control Bracket) (High Speed Control)

Not For Reproduction

Copyright © Briggs & Stratton. All Rights reserved

Blower Housing

Mfg. No: 42A707-2238-E1

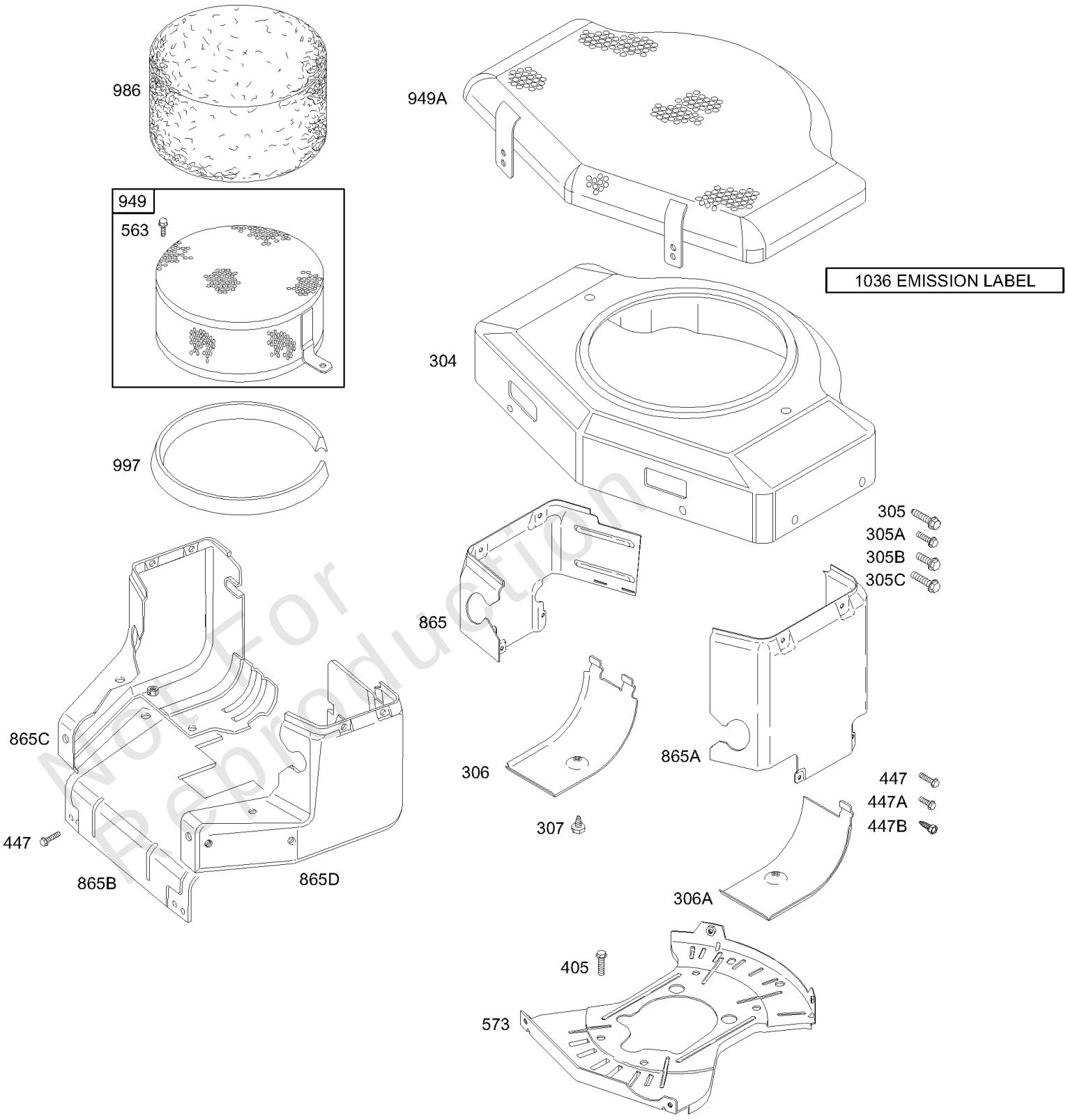

Not For Reproduction

Illustrations cover a range of engines. Parts shown without corresponding text may not be used on your specific engine.

Assemblies include all parts shown in frames.

Copyright © Briggs & Stratton. All Rights reserved

Blower Housing

REF NO	PART NO	QTY	DESCRIPTION
304	690826		HOUSING, Blower -(Black)
304	691390		HOUSING, Blower -(Red)
305A	691003		SCREW
305	690960		SCREW -(Blower Housing)
306A	690435		SHIELD, Cylinder
306	690414		SHIELD, Cylinder
307	691003		SCREW
405	690364		SCREW
447	690297		SCREW -(Regulator)
573	690764		PLATE, Back -Used Before Code Date 00101600
573	696040		PLATE-BACK -Used After Code Date 00101500
865A	691197		COVER-AIR GUIDE
865	691196		COVER-AIR GUIDE
1036	499379		LABEL, Emissions -Used Before Code Date 99010100
1036	694391		LABEL, Emissions -Used After Code Date 98123100 and -Used Before Code Date 99100100
1036	694979		LABEL, Emissions -Used After Code Date 99093000 and -Used Before Code Date 00070100
1036	695702		LABEL, Emissions -Used After Code Date 00063000

Not For Reproduction

Copyright © Briggs & Stratton. All Rights reserved

Cam, Crankcase Cover, Crankshaft, Cylinder Head, Pistons, Valves

Mfg. No: 42A707-2238-E1

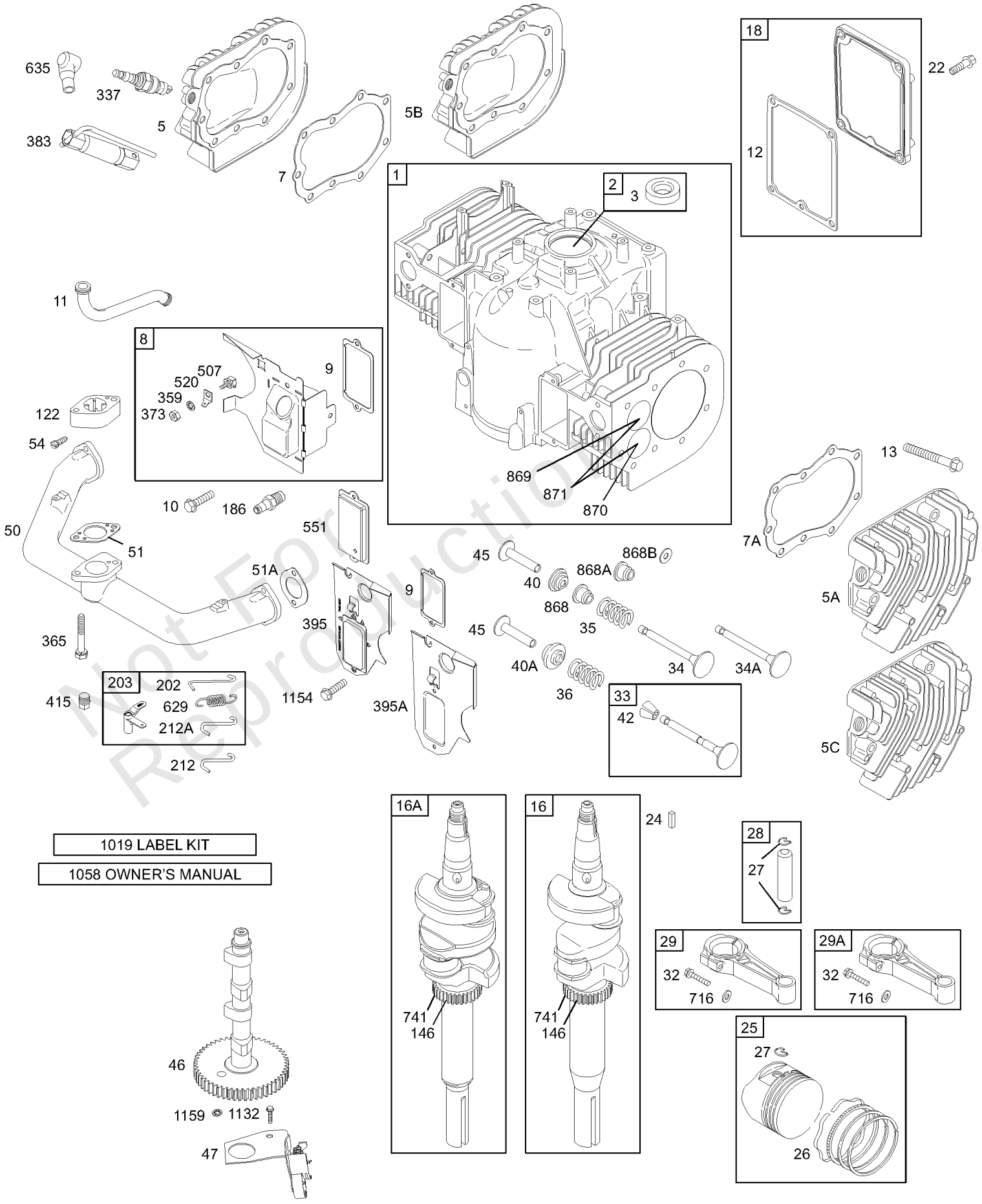

Illustrations cover a range of engines. Parts shown without corresponding text may not be used on your specific engine.

Assemblies include all parts shown in frames.

Not For Reproduction

Cam, Crankcase Cover, Crankshaft, Cylinder Head, Pistons, Valves

REF NO	PART NO	QTY	DESCRIPTION
1	498583		CYLINDER ASSEMBLY
2	399265		KIT, Bushing/Seal -(Magneto Side)
3	391086S		SEAL, Oil
5A	493458		HEAD, Cylinder -(Cylinder 2)
5	493457		HEAD, Cylinder -(Cylinder 1)
7A	271868S		GASKET, Cylinder Head -(Cylinder 2)
7	271867S		GASKET, Cylinder Head -(Cylinder 1)
8	495754		BREATHER ASSEMBLY -(Cylinder 1)
9	27803S		GASKET, Breather
10	690334		SCREW -(Breather Assembly)
11	691899		TUBE, Breather
12	692287		GASKET, Crankcase
13	691651		SCREW -(Cylinder Head)
16	690636		CRANKSHAFT
18	495901		COVER-CRANKCASE
22	691104		SCREW -(Crankcase Cover)
24	222698S		KEY, Flywheel
25	498584		PISTON ASSEMBLY -(Standard)
25	498585		PISTON ASSEMBLY -(.010 Oversize)
25	498586		PISTON ASSEMBLY -(.020 Oversize)
25	498587		PISTON ASSEMBLY -(.030 Oversize)
26	394959		SET, Ring -(Standard)
26	394960		SET, Ring -(.010 Oversize)
26	394961		SET, Ring -(.020 Oversize)
26	394962		SET, Ring -(.030 Oversize)
27	691299		LOCK, Piston Pin -Used After Code Date 96042900
27	691792		LOCK, Piston Pin -Used Before Code Date 96043000
28	299691		PIN, Piston -Used Before Code Date 96043000
28	391286		PIN, Piston -(.005 Oversize) -Used Before Code Date 96043000
28	498319		PIN, Piston -Used After Code Date 96042900
28	498320		PIN, Piston -(.005 Oversize) -Used After Code Date 96042900
29	394306		ROD, Connecting -(Standard)
29	397158		ROD, Connecting -(.020 Undersize)

Not For Reproduction

Copyright © Briggs & Stratton. All Rights reserved

Cam, Crankcase Cover, Crankshaft, Cylinder Head, Pistons, Valves

Mfg. No: 42A707-2238-E1

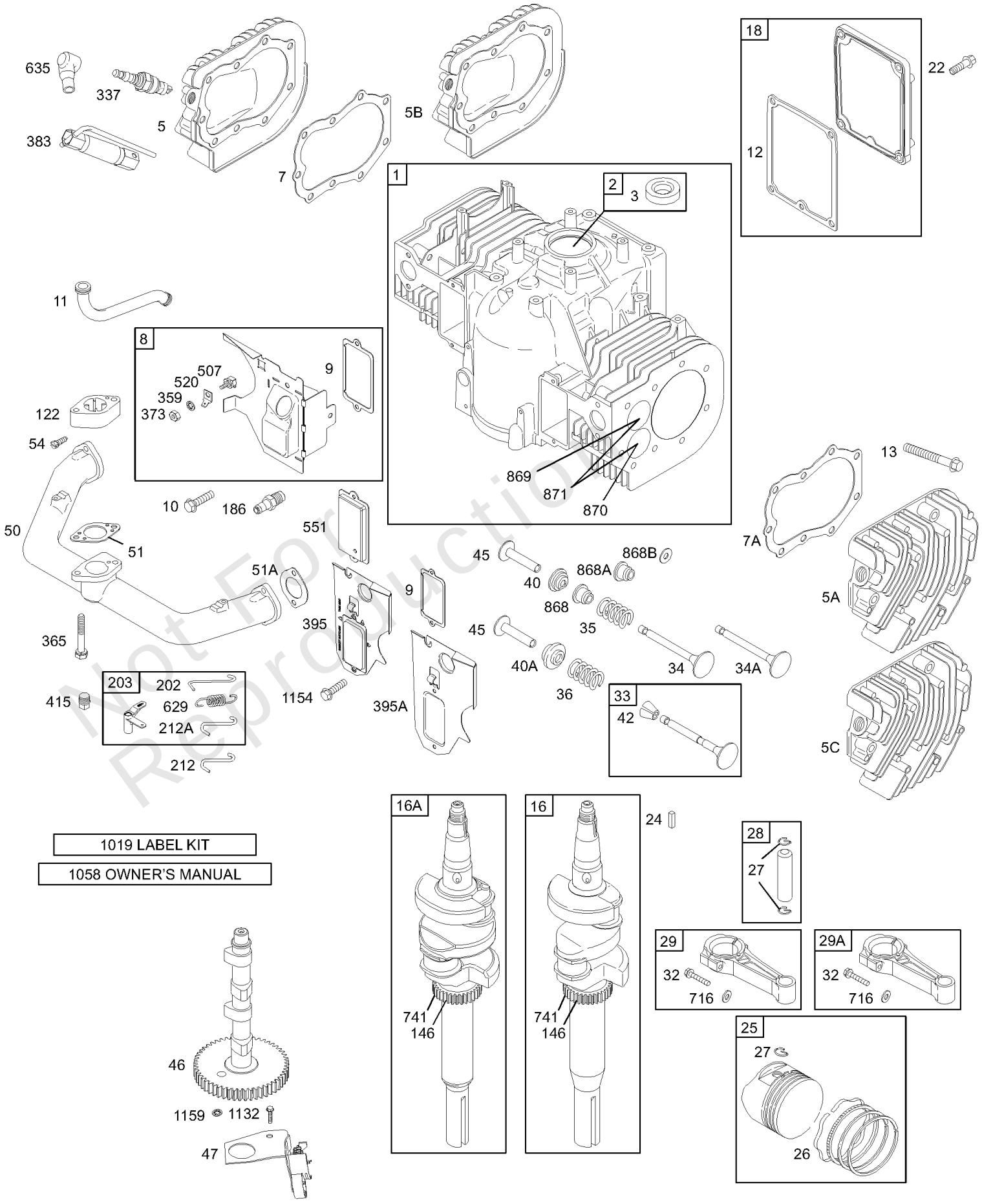

Not For Reproduction

Illustrations cover a range of engines. Parts shown without corresponding text may not be used on your specific engine.
Assemblies include all parts shown in frames.

Copyright © Briggs & Stratton. All Rights reserved

REF NO	PART NO	QTY	DESCRIPTION
32	691133		SCREW -(Connecting Rod)
33	691794		VALVE, Exhaust
34	691804		VALVE-INTAKE
35	691605		SPRING, Valve -(Intake)
36	691597		SPRING, Valve -(Exhaust)
40A	691939		RETAINER-VALVE -(Exhaust)
40	690656		RETAINER, Valve -(Intake)
42	494553		KEEPER, Valve -(Exhaust)
45	691800		TAPPET, Valve
46	214484		CAMSHAFT
47	691964		GEAR, Governor
50	691709		MANIFOLD, Intake
51A	692219		GASKET, Intake
51	692278		GASKET, Intake
54	93208		SCREW -(Intake Manifold)
122	691928		SPACER, Carburetor
146	691639		KEY, Woodruff
186	691764		CONNECTOR-HOSE -(Pulse Line)
202	690570		LINK, Mechanical Governor
203	493230		LINK, Throttle
212A	690571		LINK, Throttle -(Used On 3 Screw Fuel Pump Mount Carburetors)
212	693544		LINK, Throttle -(4 Screw Fuel Pump Mount)
337	802592S		PLUG, Spark -(Resistor)
359	691077		WASHER
365	690321		SCREW -(Carburetor)
373	691612		NUT
383	89838S		WRENCH-SPARK PLUG
395	690481		COVER, Valve Chamber
507	691972		INSULATOR
520	691084		TERMINAL, Ground
551	690415		COVER, Breather Passage
629	262539		SPRING, Throttle Return -(Throttle Return)
635	66538S		BOOT, Spark PLug
716	220863		WASHER -(1/4 X 5/8 X 1/32)
741	691285		GEAR, Timing
868	692324		SEAL, Valve -(Black)
869	691802		SEAT, Valve -(Intake)
870	691844		SEAT-VALVE -(Exhaust)
871	231218		BUSHING, Valve Guide -(Intake)

Not For Reproduction

Copyright © Briggs & Stratton. All Rights reserved

Cam, Crankcase Cover, Crankshaft, Cylinder Head, Pistons, Valves

Mfg. No: 42A707-2238-E1

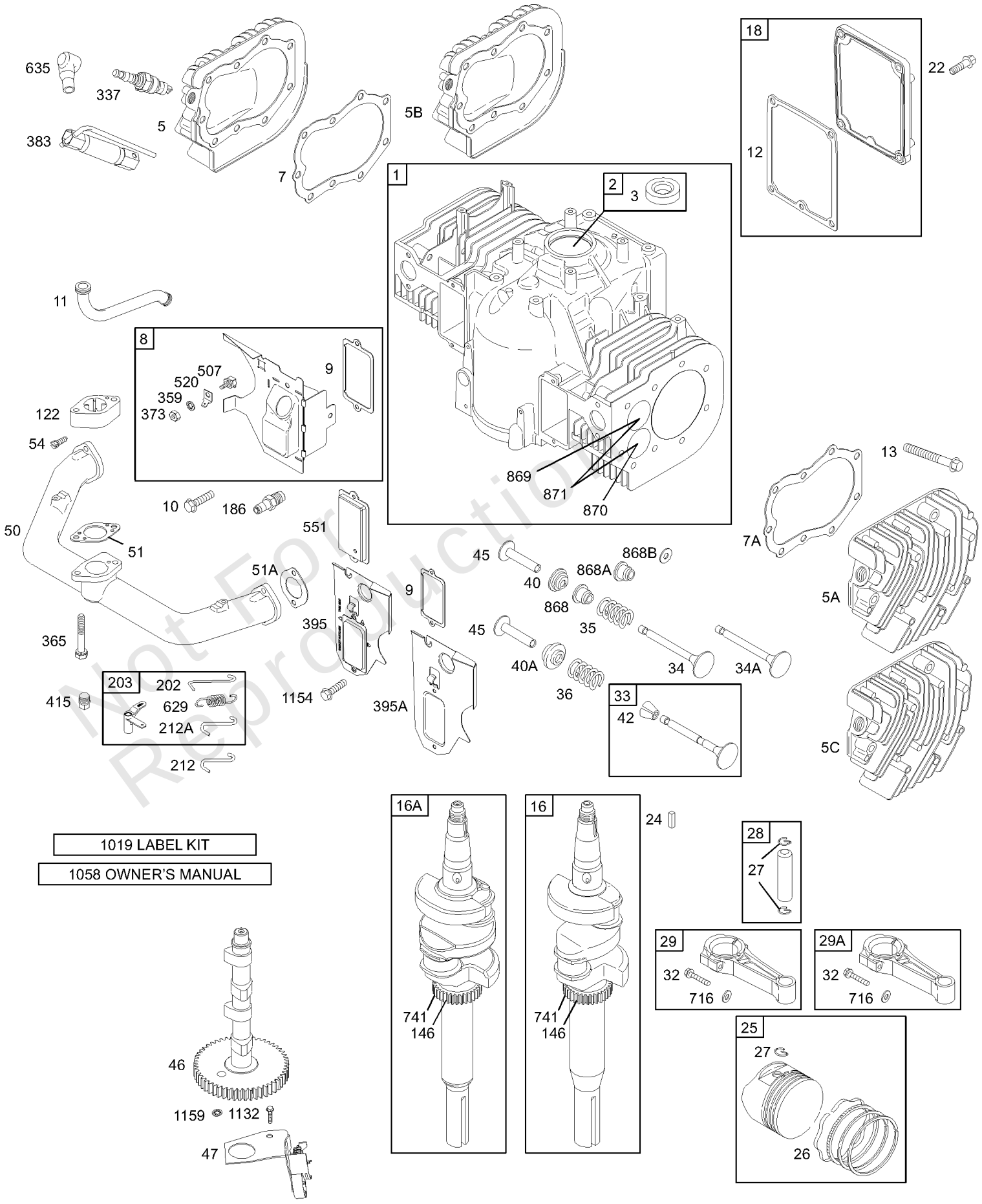

Not For Reproduction

Illustrations cover a range of engines. Parts shown without corresponding text may not be used on your specific engine.

Assemblies include all parts shown in frames.

Copyright © Briggs & Stratton. All Rights reserved

REF NO	PART NO	QTY	DESCRIPTION
871	261961		BUSHING, Valve Guide -(Exhaust)
1019	496726		KIT, Label
1058	272112		MANUAL, Operator's
1058	274796		MANUAL, Operator's
1132	690353		SCREW -(Oil Slinger)
1154	690366		SCREW -(Valve Cover)

Not For Reproduction

Copyright © Briggs & Stratton. All Rights reserved

Mfg. No: 42A707-2238-E1

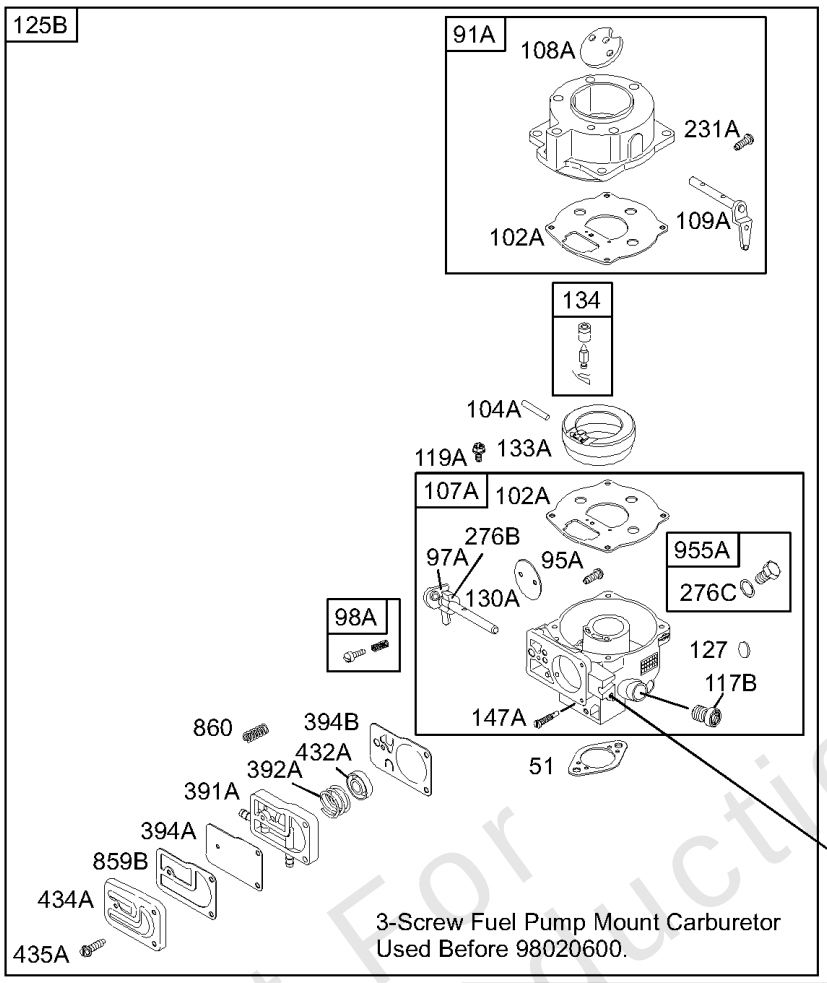

Model 42A7

Model 42B7

Model 42D7

Model 42E7

Model 4227

3-Screw Fuel Pump Mount Carburetor Used Before 98020600.

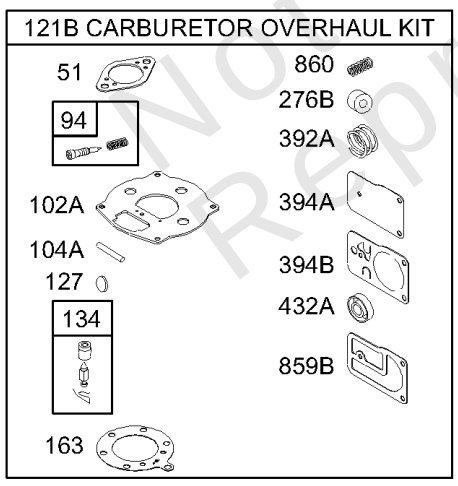

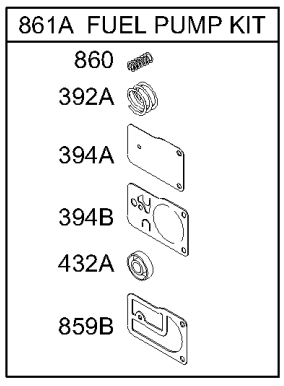

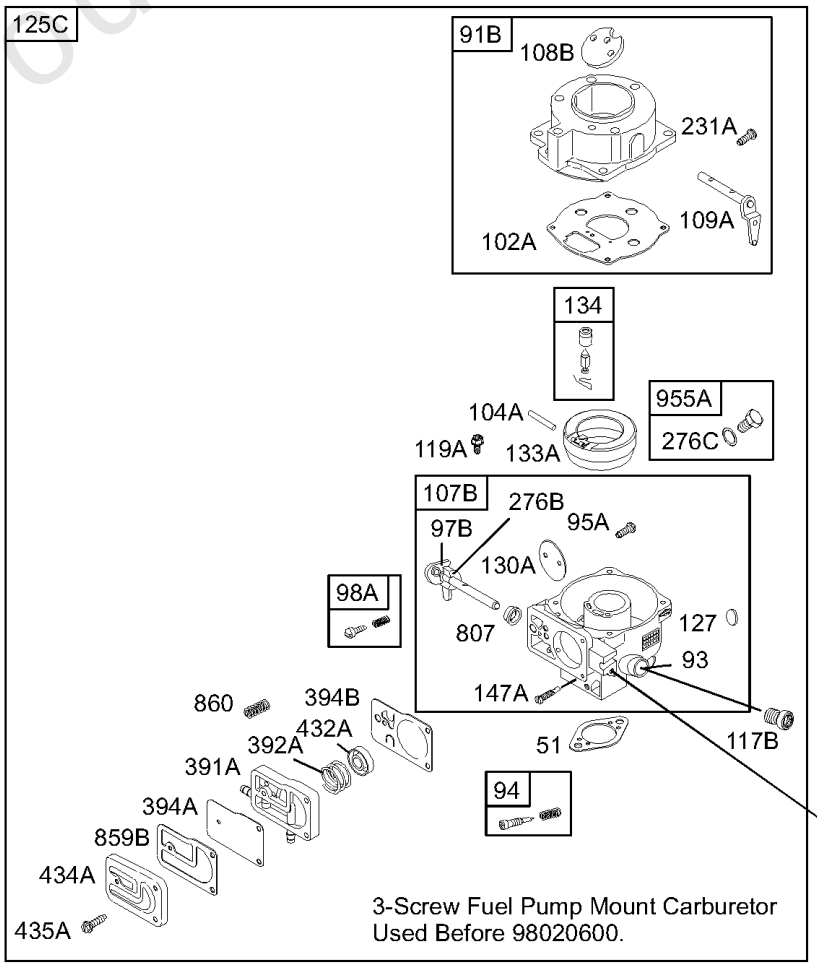

Model 4607

3-Screw Fuel Pump Mount Carburetor Used Before 98020600.

Not For Reproduction

Illustrations cover a range of engines. Parts shown without corresponding text may not be used on your specific engine.
Assemblies include all parts shown in frames.

Copyright © Briggs & Stratton. All Rights reserved

Carburetor

REF NO	PART NO	QTY	DESCRIPTION
51	692278		GASKET, Intake
91A	499281		BODY, Upper Carburetor
91B	495035		BODY, Upper Carburetor
93	690513		BUSHING, Throttle Shaft
94	491538		VALVE, Idle Mixture
95A	691437		SCREW -(Throttle Valve)
97A	691485		SHAFT, Throttle
97B	690629		SHAFT-THROTTLE
98A	693942		KIT, Idle Speed
102A	273186S		GASKET, Carburetor Body
104A	691775		PIN, Float Hinge
107B	491543		BODY, Lower Carburetor
108B	223534		VALVE, Choke
108A	691233		VALVE, Choke
109A	691957		SPRING, Valve
117B	691773		JET, Main -(Standard)
117C	691253		JET, Main -(Standard)
118B	231333		JET, Main -(High Altitude)
119A	691090		SCREW -(Upper To Lower Carburetor Body)
121B	694056		KIT, Carburetor Overhaul -(Used On 3 Screw Fuel Pump Mount Carburetors)
125B	-----		MOTOR, Starter -(3 Screw Fuel Pump Mount)(service With Reference 125a)
127	691739		PLUG-WELCH
130A	691727		VALVE, Throttle
133A	692265		FLOAT-CARBURETOR
134	394682		KIT, Needle/Seat -(Gravity Feed)
147A	691431		JET, Pilot
163	690273		GASKET, Air Cleaner -(Air Cleaner)
231A	691437		SCREW -(Throttle Valve)
267	690316		SCREW -(Casing Clamp)
276B	691872		WASHER, Sealing -(Foam)
276C	691319		WASHER, Sealing -(Carburetor Plug)
391A	691896		BODY, Fuel Pump
392A	691801		SPRING, Pump Diaphragm
394A	691871		DIAPHRAGM, Carburetor
394B	272638S		DIAPHRAGM-CARB.
432A	690766		CAP-SPRING
434A	690434		COVER, Diaphragm
435A	691085		SCREW -(Diaphragm Cover)
807	693511		SPACER -(Throttle)
859B	691873		GASKET, Carburetor Pump

Not For Reproduction

Mfg. No: 42A707-2238-E1

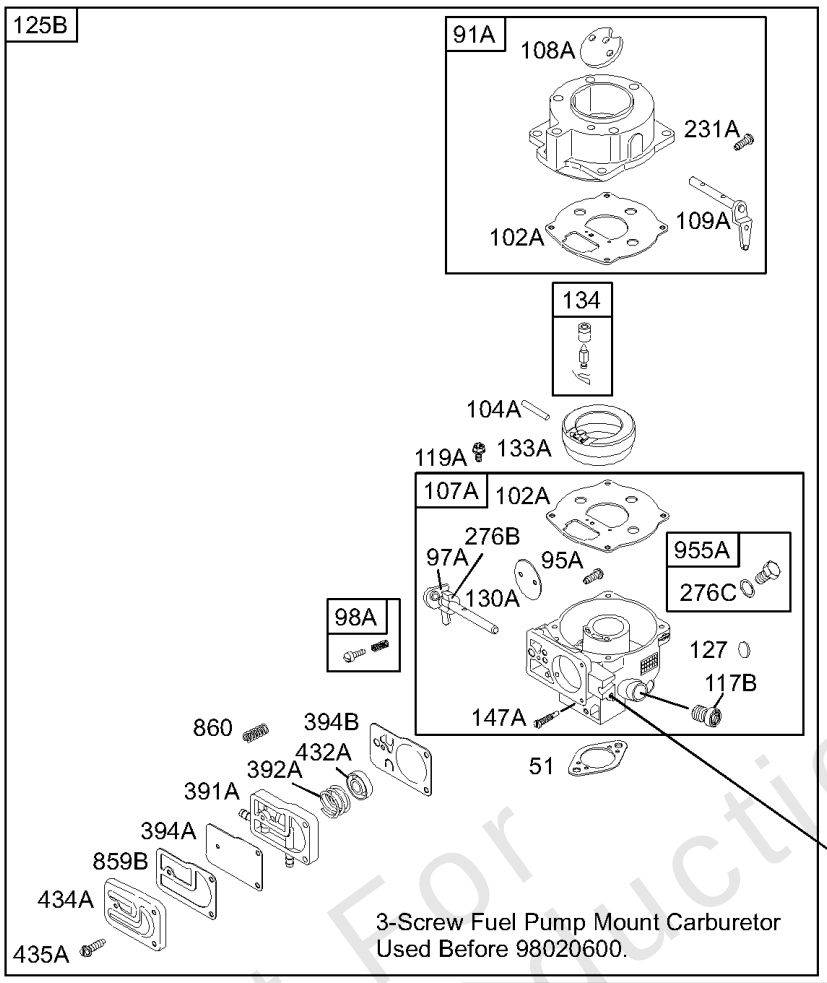

Model 42A7

Model 42B7

Model 42D7

Model 42E7

Model 4227

3-Screw Fuel Pump Mount Carburetor Used Before 98020600.

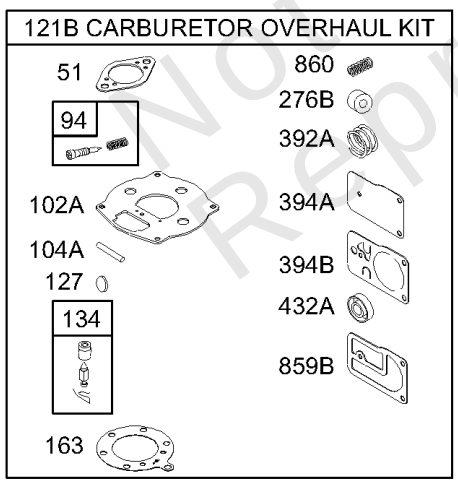

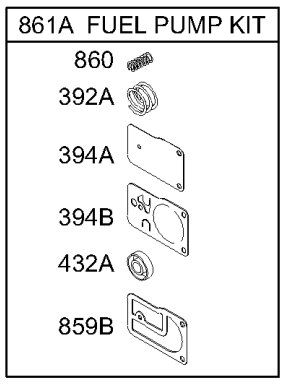

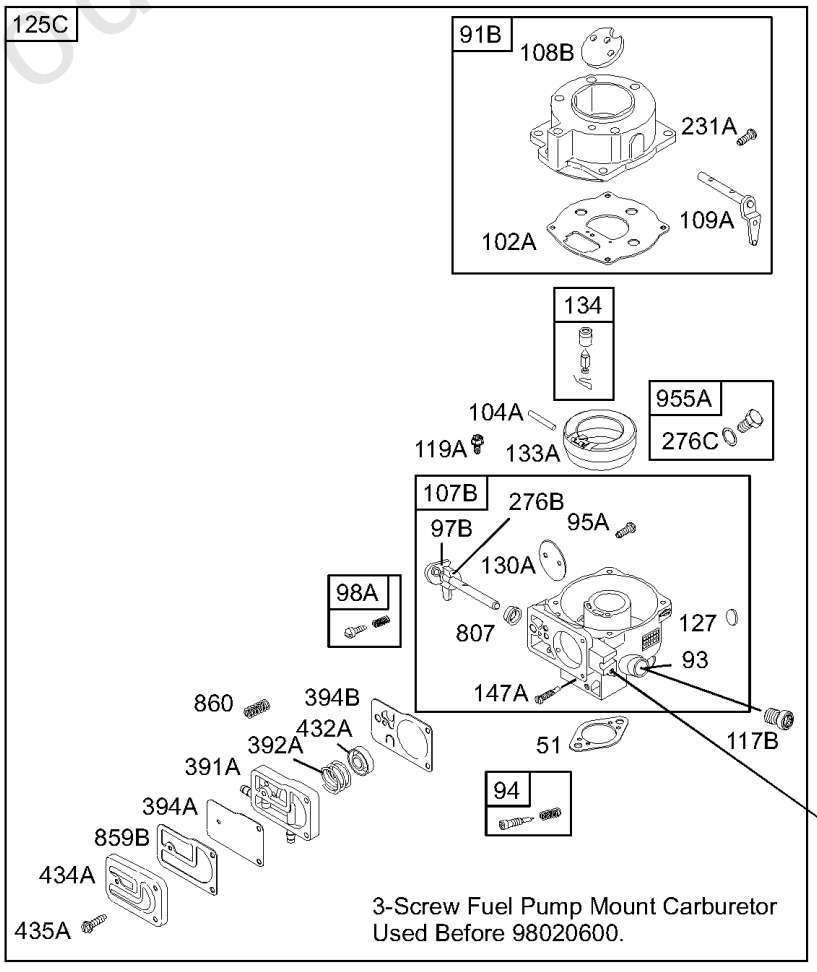

Model 4607

3-Screw Fuel Pump Mount Carburetor Used Before 98020600.

Not For Reproduction

Illustrations cover a range of engines. Parts shown without corresponding text may not be used on your specific engine.
Assemblies include all parts shown in frames.

Copyright © Briggs & Stratton. All Rights reserved

Carburetor

REF NO	PART NO	QTY	DESCRIPTION
860	691799		SPRING, Diaphragm
861A	393397		KIT, Fuel Pump -(Used On 3 Screw Fuel Pump Mount Carburetors)
947A	397266		SOLENOID, Fuel
955A	397882		PLUG, Carburetor -(Solenoid Hole)

Not For Reproduction

Copyright © Briggs & Stratton. All Rights reserved

Mfg. No: 42A707-2238-E1

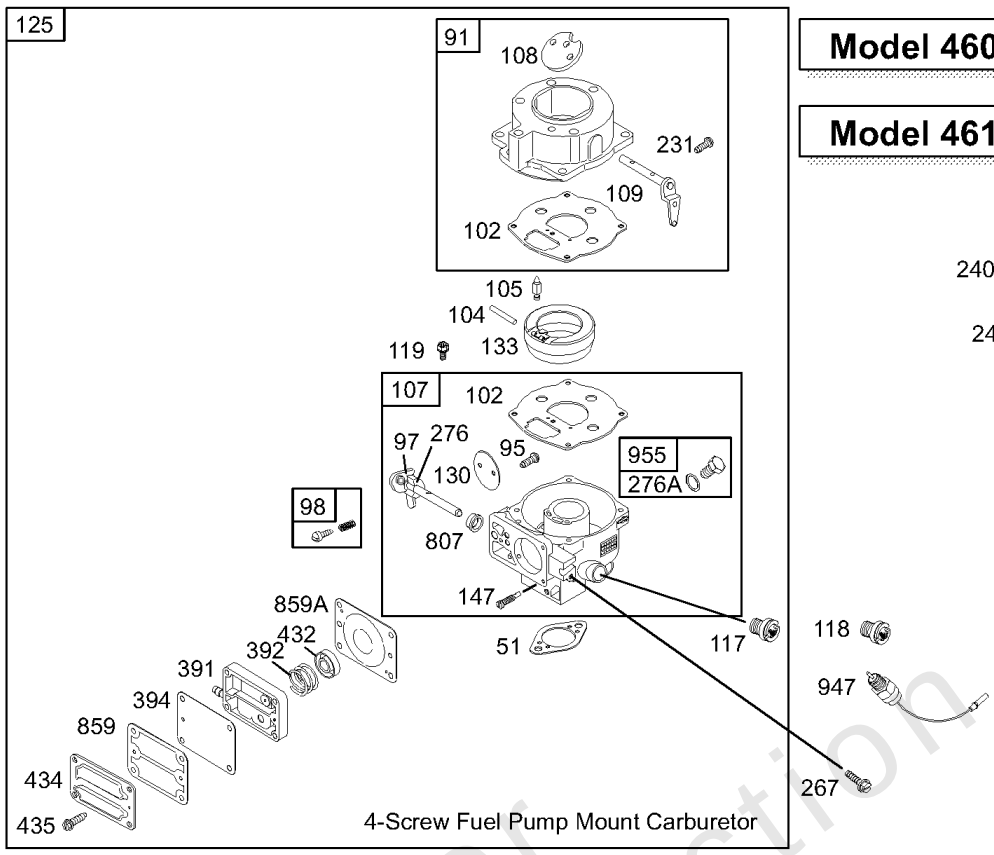

Model 4607

Model 4617

SEE ADDITIONAL PAGES FOR MORE CARBURETOR INFORMATION

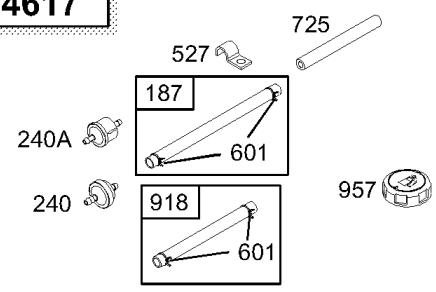

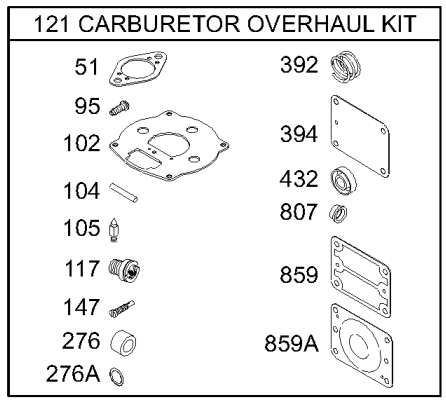

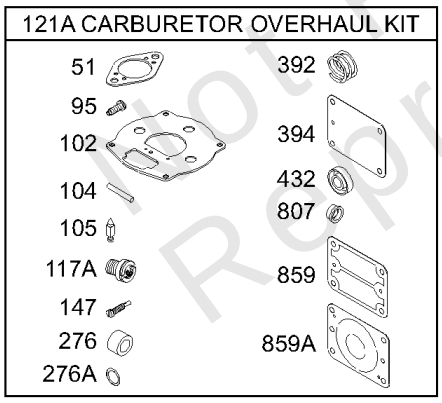

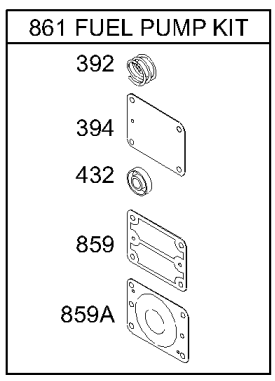

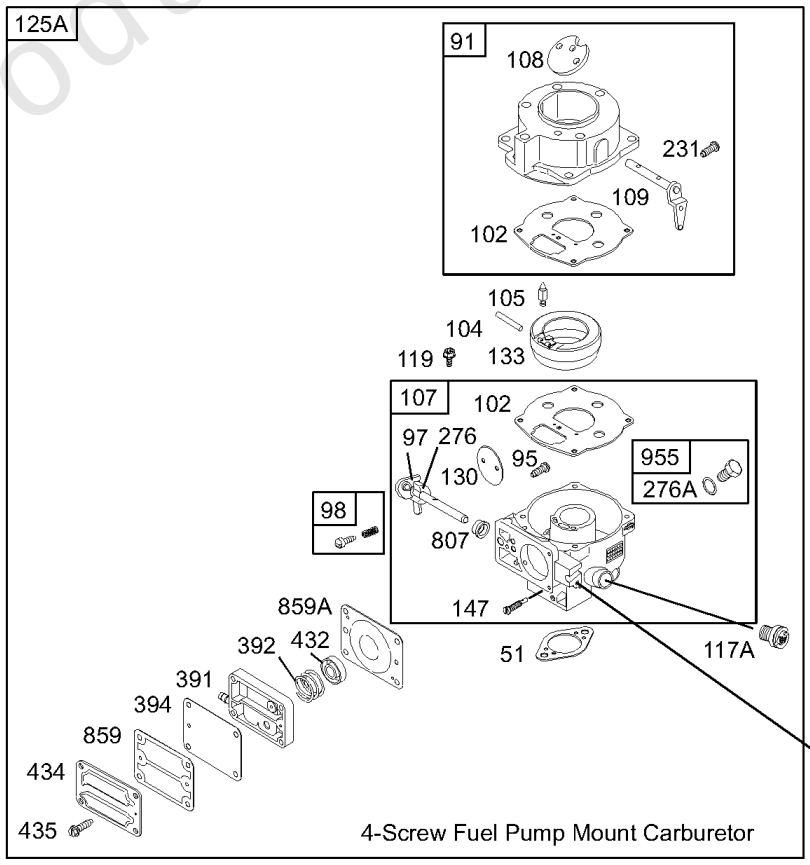

Model 42A7

Model 42B7

Model 42D7

Model 42E7

Model 4227

Illustrations cover a range of engines. Parts shown without corresponding text may not be used on your specific engine.

Assemblies include all parts shown in frames.

Not For Reproduction

Copyright © Briggs & Stratton. All Rights reserved

Carburetor, Kits/Gaskets-Carburetor

REF NO	PART NO	QTY	DESCRIPTION
51	692278		GASKET, Intake
91	693483		BODY, Upper Carburetor
95	690718		SCREW
97	693485		SHAFT, Throttle
98	807923		KIT, Idle Speed
102	693509		GASKET, Carburetor Body
104	693506		PIN-FLOAT HINGE
105	692078		VALVE, Float Needle
107	693482		BODY, Lower Carburetor
108	693505		VALVE, Choke
109	693498		SHAFT, Choke
117A	693507		JET, Main -(Standard)
118A	693499		JET, Main -(High Altitude)
119	690720		SCREW
121A	693503		KIT-CARB OVERHAUL -(4 Screw Fuel Pump Mount)
125A	693480		CARBURETOR -(4 Screw Fuel Pump Mount)
130	693504		VALVE, Throttle
133	693512		FLOAT, Carburetor
147	693508		JET, Pilot
187	499167		LINE, Fuel -(Cut To Required Length)
240	394358S		FILTER, Fuel
267	690316		SCREW -(Casing Clamp)
276A	693510		WASHER, Sealing -(Foam)
276	693497		WASHER, Sealing -(Carburetor Plug)
391	693487		BODY, Fuel Pump
392	693491		SPRING, Pump Diaphragm
394	693489		DIAPHRAGM, Carburetor
432	693492		CAP, Spring
434	693493		COVER, Diaphragm
435	693494		SCREW -(Diaphragm Cover)
527	690423		CLAMP, Tube
601	95162S		CLAMP, Hose
725	280866		SHIELD, Heat -(20)
807	693511		SPACER -(Throttle)
859A	693490		GASKET, Carburetor Pump
859	693488		GASKET, Carburetor Pump
861	693502		KIT, Fuel Pump -(4 Screw Fuel Pump Mount)
918	393815		HOSE, Vacuum -(Cylinder To Impulse Pump)(Cut To Required Length)
947	693495		SOLENOID, Fuel
955	693513		PLUG, Carburetor

Not For Reproduction

Copyright © Briggs & Stratton. All Rights reserved

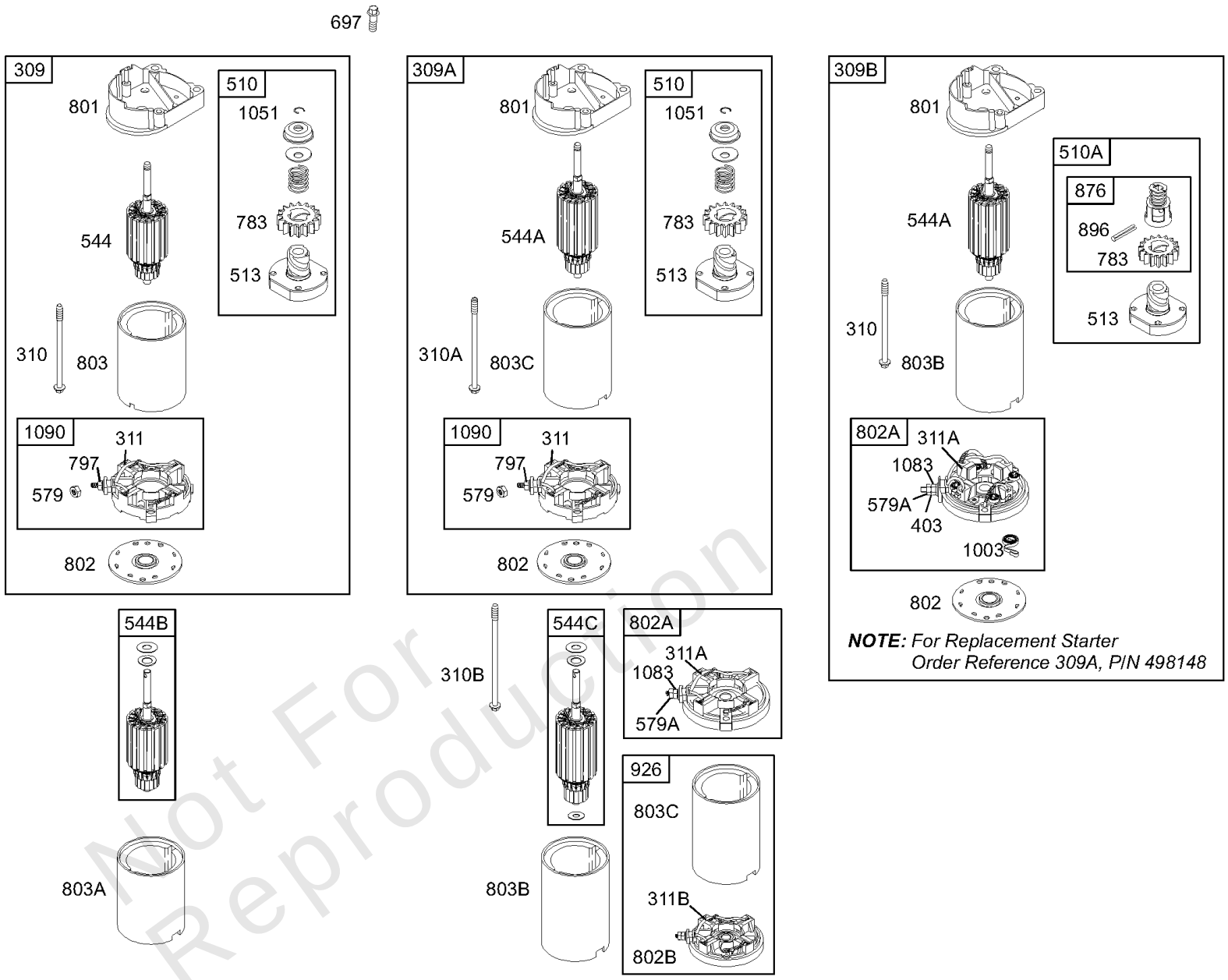

Not For Reproduction

Illustrations cover a range of engines. Parts shown without corresponding text may not be used on your specific engine.
Assemblies include all parts shown in frames.

Copyright © Briggs & Stratton. All Rights reserved

Electric Starter

REF NO	PART NO	QTY	DESCRIPTION
309B	-----		MOTOR, Starter
309A	498148		MOTOR, Starter -(4 3/8 Housing)
309	497596		MOTOR, Starter -(3 5/8 Housing)
310A	691263		BOLT -(Starter Motor) (4 3/8 Housing)
310B	692329		BOLT -(Starter Motor) (4 1/2 And 4 3/8 Housing)
310	690323		SCREW
311A	395538		SET, Brush -(3 5/8 Housing)
311B	490311		SET, Brush -(4 9/16 Housing)
311	497608		SET, Brush
403	690288		WASHER -(End Cap)
510A	495878		DRIVE, Starter -(4 3/8 Housing)
510	497606		DRIVE, Starter
513	692024		CLUTCH, Drive
544C	490309		ARMATURE, Starter -(4 1/2 And 4 3/8 Housing)
544B	390837		ARMATURE, Starter -(3 5/8 Housing)
544A	498595		ARMATURE, Starter -(4 3/8 Housing)(service With Reference 309A)
544	692034		ARMATURE, Starter -(3 5/8 Housing)
579A	691626		NUT -(Starter Cable)
579	690958		NUT
697	691625		SCREW -(Drive Cap)
783	693059		GEAR, Pinion -(Aluminum Ring Gear Only)
797	693167		NUT
801	691967		CAP, Drive
802A	395537		CAP, End -(3 5/8 Housing)
802B	494988		CAP, End -(4 3/8 Housing)
802	691286		CAP, End
803A	398159		HOUSING, Starter -(3 5/8 Housing)
803A	494205		HOUSING, Starter -(4 3/8 Housing)
803B	398892		HOUSING, Starter -(4 9/16 Housing)
803	693757		HOUSING, Starter -(3 5/8 Housing)
876	495877		DRIVE, Starter -(4 3/8 Housing)
896	691641		PIN, Drive Retainer
926	498233		KIT, Housing/Cap -(4 9/16 Housing)
1003	490316		SPRING, Brush -(4 1/2 Housing)

Not For Reproduction

Copyright © Briggs & Stratton. All Rights reserved

Mfg. No: 42A707-2238-E1

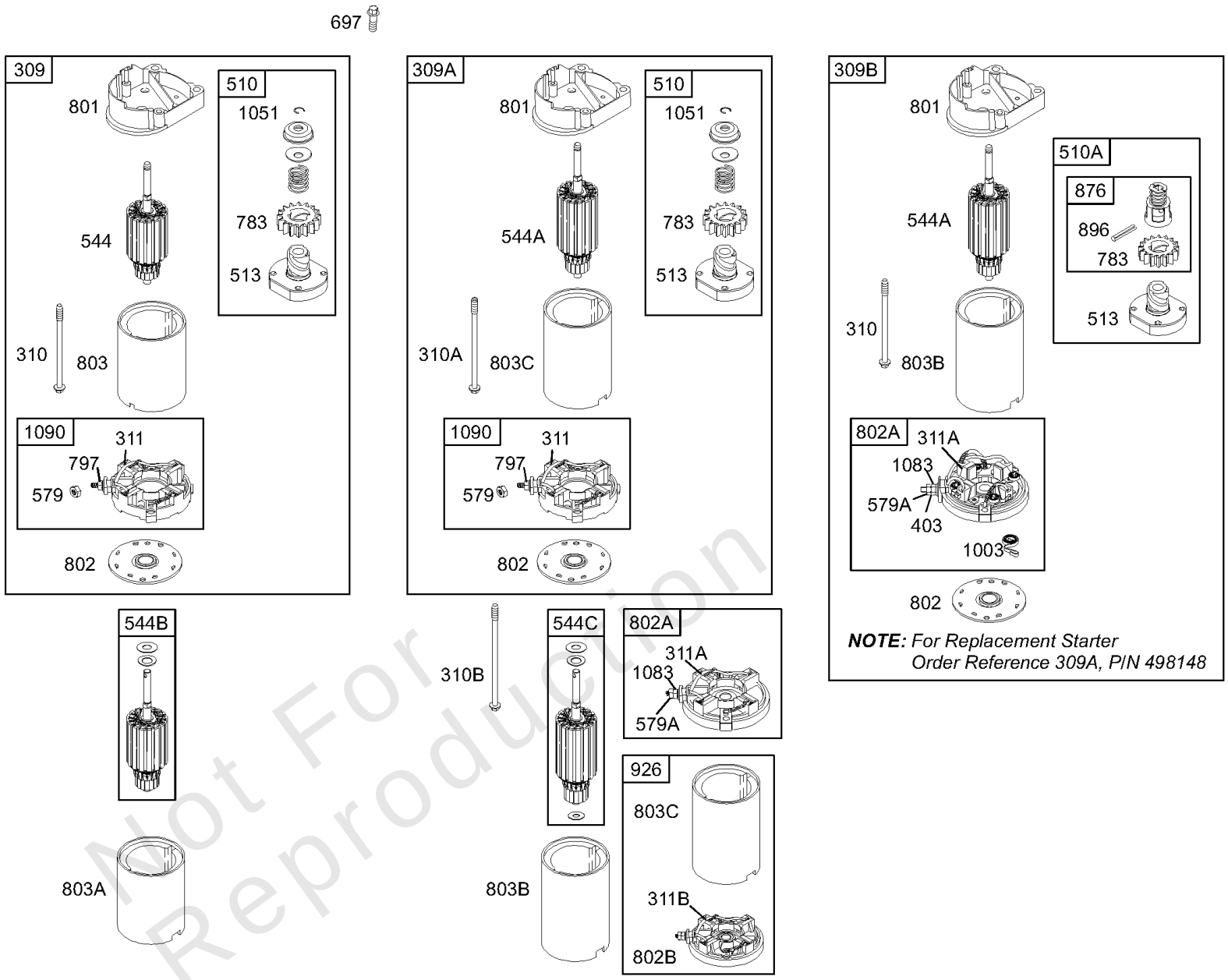

Not For Reproduction

Illustrations cover a range of engines. Parts shown without corresponding text may not be used on your specific engine.
Assemblies include all parts shown in frames.

Copyright © Briggs & Stratton. All Rights reserved

Electric Starter

REF NO	PART NO	QTY	DESCRIPTION
1051	691265		RING, Retaining
1083	690958		NUT
1090	691293		RETAINER, Brush

Not For Reproduction

Mfg. No: 42A707-2238-E1

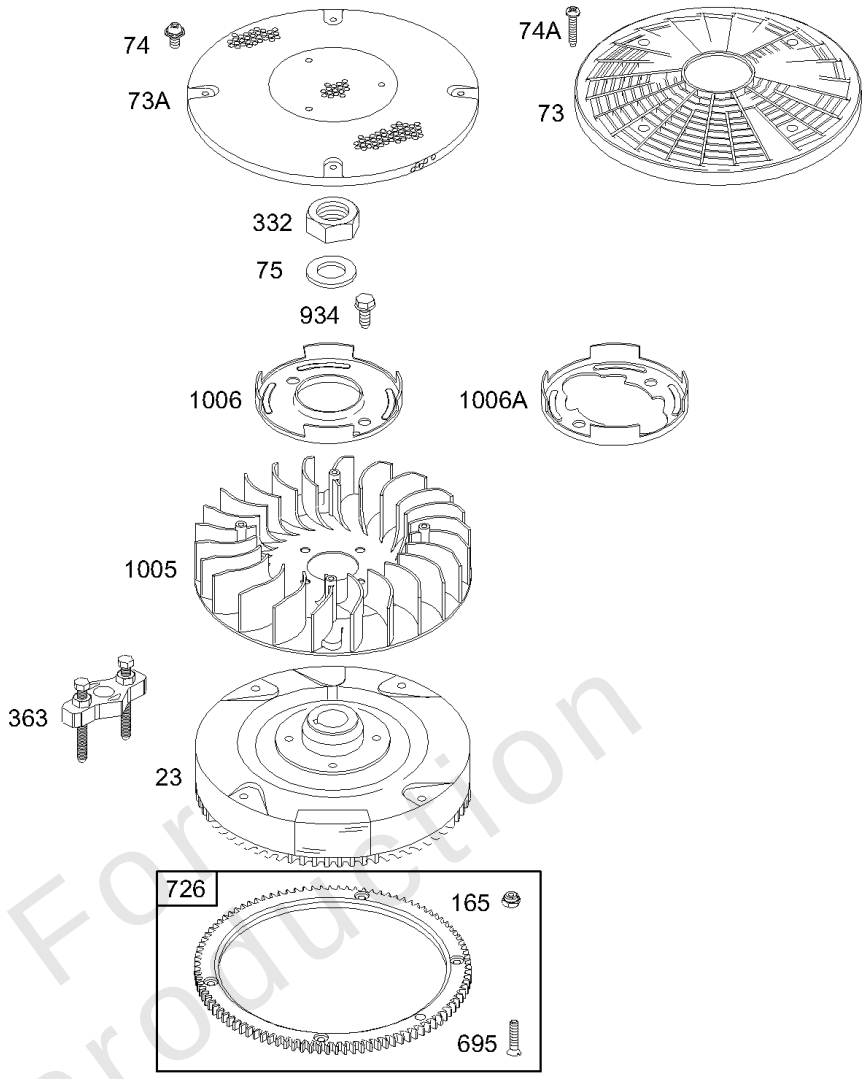

Not For Reproduction

Illustrations cover a range of engines. Parts shown without corresponding text may not be used on your specific engine.
Assemblies include all parts shown in frames.

Copyright © Briggs & Stratton. All Rights reserved

Flywheel

REF NO	PART NO	QTY	DESCRIPTION
23	691976		FLYWHEEL
73A	692527		SCREEN-ROTATING -(Steel)
73	691438		SCREEN, Rotating -(Plastic)
74A	691134		SCREW -(Rotating Screen)
74	691677		SCREW -(Rotating Screen)
75	691056		WASHER
165	693148		NUT -(Ring Gear)
332	691059		NUT
363	19203		PULLER, Flywheel
695	693149		SCREW -(Ring Gear)
726	391362		GEAR, Ring -(Includes Mounting Hardware)
934	691058		SCREW -(Fan Retainer)
1005	498157		FAN, Flywheel
1006	691247		RETAINER, Fan

Not For Reproduction

Copyright © Briggs & Stratton. All Rights reserved

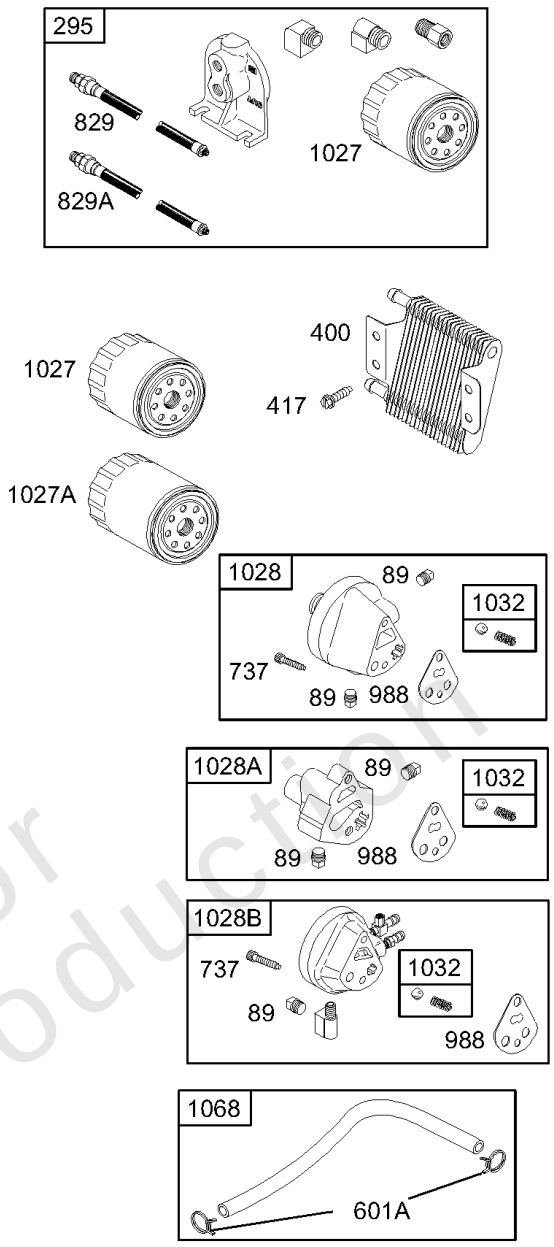

Not For Reproduction

Illustrations cover a range of engines. Parts shown without corresponding text may not be used on your specific engine.
Assemblies include all parts shown in frames.

Copyright © Briggs & Stratton. All Rights reserved

Oil Group

REF NO	PART NO	QTY	DESCRIPTION
89	690283		PLUG, Oil -(1/8 Standard)
737	690332		SCREW -(Oil Filter Adapter)
988	691313		GASKET, Oil Adapter
1027A	491056		FILTER-OIL -(3-1/4) -Used Before Code Date 95060500
1027	492932S		FILTER, Oil -Used After Code Date 95060400
1028	491721		ADAPTER, Oil Filter
1032	491710		SPRING, Compression

Not For Reproduction

Copyright © Briggs & Stratton. All Rights reserved

Replacement Engine - US & Canada

REF NO	PART NO	QTY	DESCRIPTION
	-----		No engine replacement. Repair engine with individual parts.
	-----		Top No-Load Speed: 3300 -Trim: ALL

Not For Reproduction

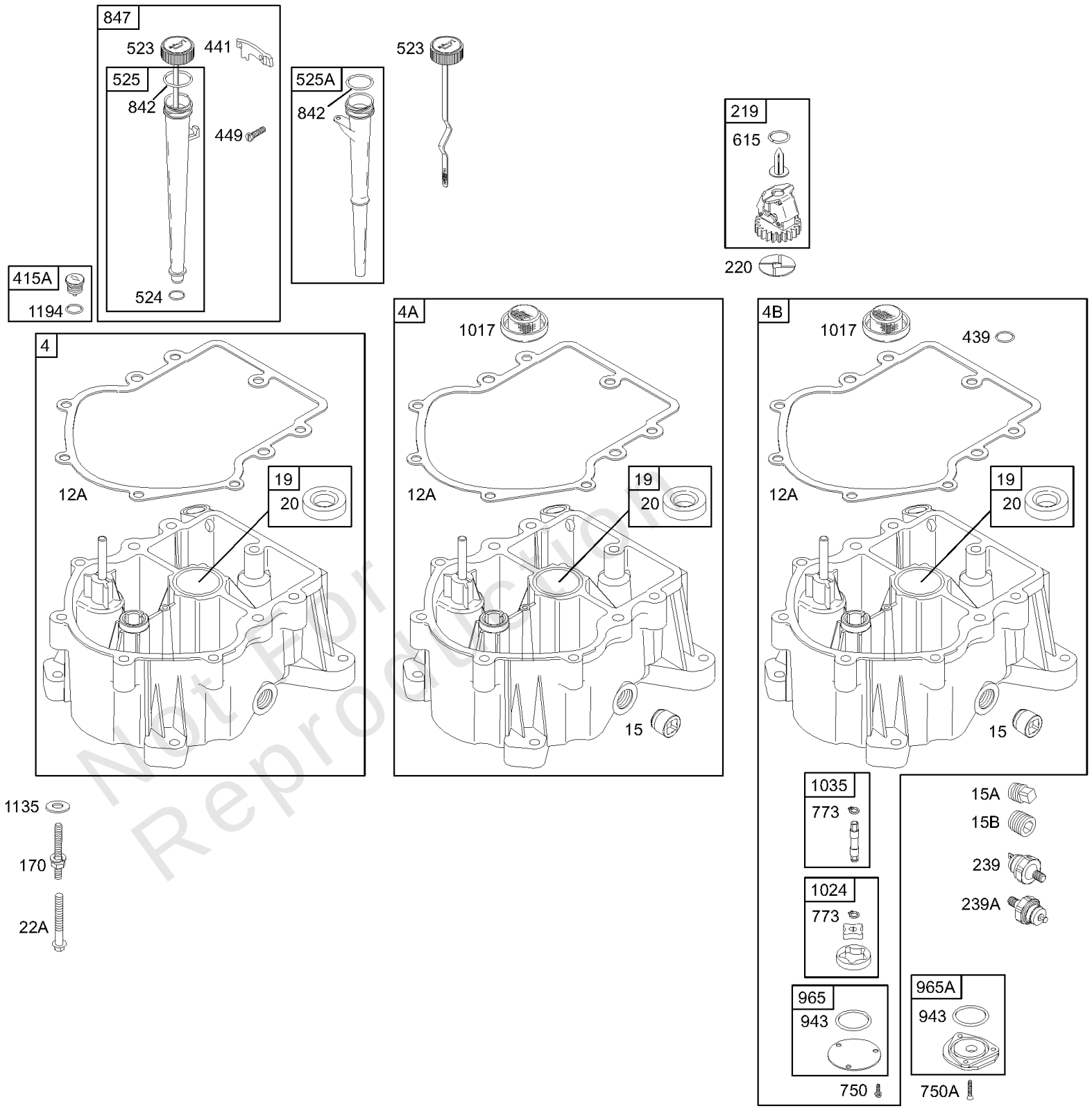

Not For Reproduction

Illustrations cover a range of engines. Parts shown without corresponding text may not be used on your specific engine.
Assemblies include all parts shown in frames.

Copyright © Briggs & Stratton. All Rights reserved

Sump

REF NO	PART NO	QTY	DESCRIPTION
4A	692709		SUMP, Engine -(Pressure Lube) -Used After Code Date 98011100
4B	692710		SUMP, Engine -(Pressure Lube) -Used Before Code Date 98011200
4	493304		SUMP, Engine -(Splash Lube)
12A	271188		GASKET, Crankcase -(.005)
12A	271189		GASKET, Crankcase -(.009)
12A	692292		GASKET, Crankcase -(.015)
15A	690946		PLUG, Oil Drain
15	691680		PLUG, Oil Drain
19	399264		KIT, Bushing/Seal -(PTO Side)
20	291675S		SEAL, Oil -(PTO Side)
22A	693972		SCREW -(Crankcase Cover)
219	394348		GEAR, Governor
220	690412		WASHER -(Governor Gear)
441	691176		BRACKET-OIL FILL
449	691044		SCREW
523	691385		DIPSTICK
524	692532		SEAL, O-Ring -(Dipstick Tube)
525	690823		TUBE, Dipstick
615	690317		RETAINER, Governor Shaft
750A	690336		SCREW -(Oil Pump Cover)
750	690960		SCREW -(Blower Housing)
773	692334		RETAINER
842	271170		SEAL, O-Ring -(Dipstick Tube)
847	495715		DIPSTICK/TUBE ASSEMBLY
943	690589		SEAL, O-Ring
965A	492197		COVER, Oil Pump
965	499613		COVER, Oil Pump
1017	690770		SCREEN, Oil Pump
1024	499054		PUMP, Oil
1035	693158		SHAFT, Pump
1135	691261		WASHER

Not For Reproduction

Copyright © Briggs & Stratton. All Rights reserved