Parts Manual

Mfg. No: 10A902-0182-01

Copyright © Briggs & Stratton. All Rights reserved

25-Apr-2024

Model Components

Page

Air Cleaner, Controls, Governor Spring, Ignition. 4
Blower Housing/Shrouds, Brake, Flywheel. 6
Camshaft, Crankcase Cover/Sump, Crankshaft, Piston/Rings/Connecting Rod. 10
Carburetor, Fuel Supply. 14
Cylinder, Cylinder Head, Gasket Set - Engine, Gasket Set - Valve, Lubrication, Operator's Manual, Warning 16
Exhaust System. 20
Replacement Engine - US & Canada. 22
Rewind Starter. 23

Not For Reproduction

Copyright © Briggs & Stratton. All Rights reserved

Air Cleaner, Controls, Governor Spring, Ignition

Mfg. No: 10A902-0182-01

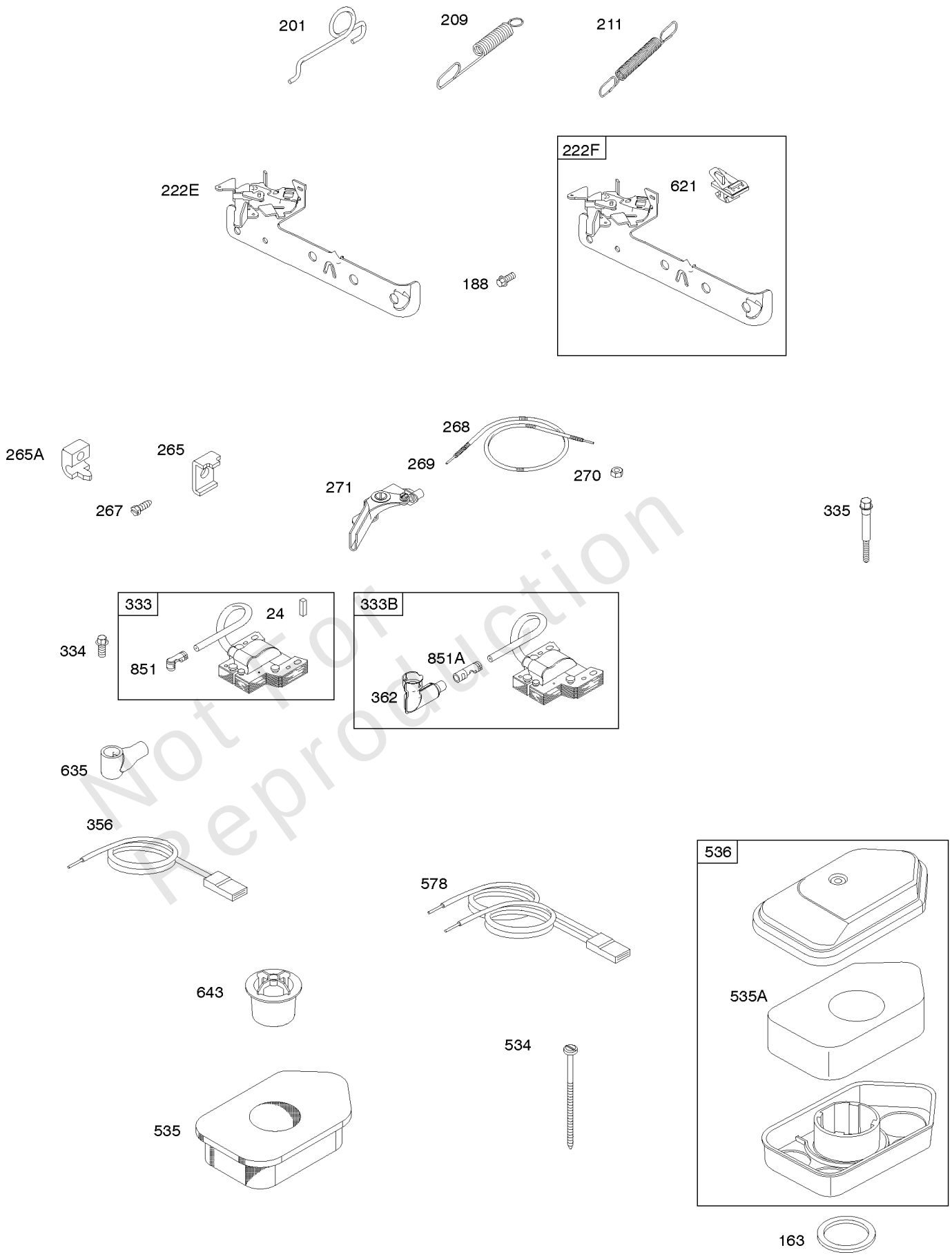

Not for Reproduction

Air Cleaner, Controls, Governor Spring, Ignition

REF NO	PART NO	QTY	DESCRIPTION
24	222698S		KEY, Flywheel
163	271139S		GASKET, Air Cleaner -(Air Cleaner)
188	692198		SCREW -(Control Bracket)
201	690347		LINK, Air Vane
209	692211		SPRING, Governor -Used Before Code Date 96052000
211	691859		SPRING, Governed Idle
222E	691446		BRACKET-CONTROL
222F	691445		BRACKET-CONTROL
265	691024		CLAMP, Casing
265A	690798		CLAMP, Casing
267	691044		SCREW -(Casing Clamp)
268	691025		CASING, Control Wire -(72" Long)(Cut To Required Length)
269	691026		WIRE, Control -(78" Long)(Cut To Required Length)
270	691027		NUT -(Control Wire Casing)
271	691028		LEVER, Control
333	793281		ARMATURE, Magneto
333B	793352		ARMATURE, Magneto
334	691061		SCREW -(Magneto Armature) (1" Long)
335	691107		SCREW -(Magneto Armature With Air Vane) (1 15/16)
356	692390		WIRE, Stop
534	691417		SCREW -(Air Cleaner)
535	272235S		FILTER, Air Cleaner Foam -Used Before Code Date 02090100
535A	698369		FILTER, Air Cleaner Foam -Used After Code Date 02083000
536	698472		CLEANER, Air
621	692310		SWITCH, Stop
635	66538S		BOOT, Spark PLug
643	691911		RETAINER, Air Filter -Used Before Code Date 97100600
851	493880S		TERMINAL-SPARK PLUG
851A	692424		TERMINAL, Spark Plug

Not For Reproduction

Copyright © Briggs & Stratton. All Rights reserved

Blower Housing/Shrouds, Brake, Flywheel

Mfg. No: 10A902-0182-01

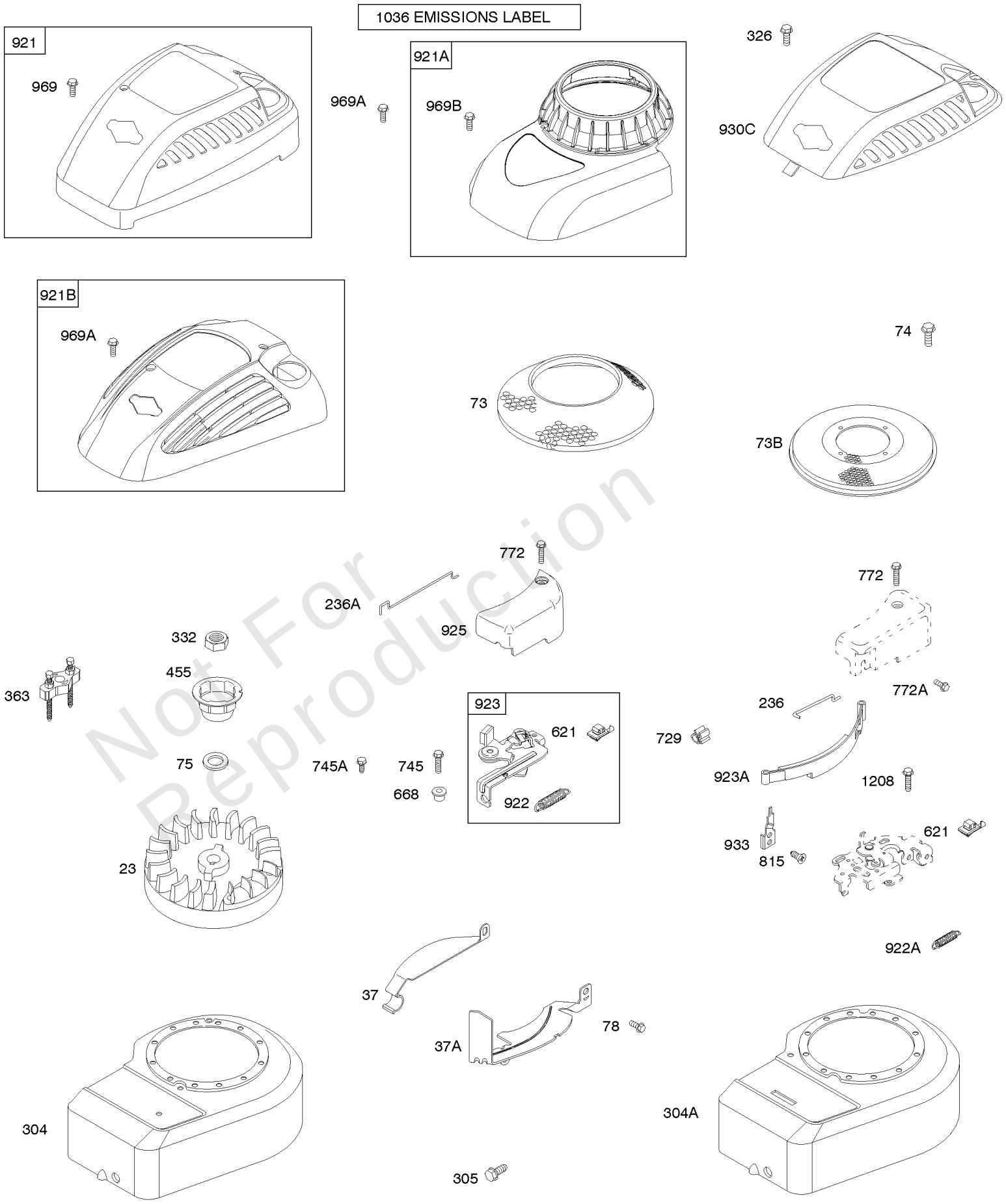

Not For Reproduction

Blower Housing/Shrouds, Brake, Flywheel

REF NO	PART NO	QTY	DESCRIPTION
23	795549		FLYWHEEL
37	690482		GUARD, Flywheel -(Carburetor Side)
37A	691209		GUARD-FLYWHEEL -(Muffler Side)
73	699850		SCREEN, Rotating -Used After Code Date 97052500
73B	691725		SCREEN, Rotating -Used Before Code Date 97052600
74	690345		SCREW -(Rotating Screen)
75	691736		WASHER -(Flywheel)
78	692198		SCREW -(Flywheel Guard)
304	691484		HOUSING, Blower -(Compliance Engines) -Used Before Code Date 99010400
304	692536		HOUSING, Blower -(Non Compliance Engines) -Used Before Code Date 99010400
304A	694236		HOUSING-BLOWER -(Compliance Engines) -Used After Code Date 99010300
304A	694051		HOUSING-BLOWER -(Non Compliance Engines) -Used After Code Date 99010300
305	692198		SCREW -(Blower Housing)
326	694046		SCREW -(Rewind Guard) (2 1/4) -Used After Code Date 99010300
326	691141		SCREW -(Rewind Guard) (1/2) -Used Before Code Date 99010400
332	690662		NUT -(Flywheel)
363	19069		PULLER, Flywheel
455	691236		CUP, Flywheel
621	692310		SWITCH, Stop
668	692889		SPACER
729	690586		CLIP, Wire
745	691146		SCREW -(Brake) (7/8)
745A	690859		SCREW -(Brake) (1/2)
772	691111		SCREW -(Linkage Cover) (1 1/8)
772	691183		SCREW -(Linkage Cover) (3/4" Long)
772A	690345		SCREW -(Linkage Cover) (1/2)
815	690324		SCREW -(Band Brake Pivot)
921	694044		HOUSING, Blower
922	692135		SPRING, Brake -Used After Code Date 97071300
922A	691809		SPRING, Brake -Used Before Code Date 97071400
923	691487		BRAKE -Used After Code Date 97071300

Not For Reproduction

Copyright © Briggs & Stratton. All Rights reserved

Blower Housing/Shrouds, Brake, Flywheel

Mfg. No: 10A902-0182-01

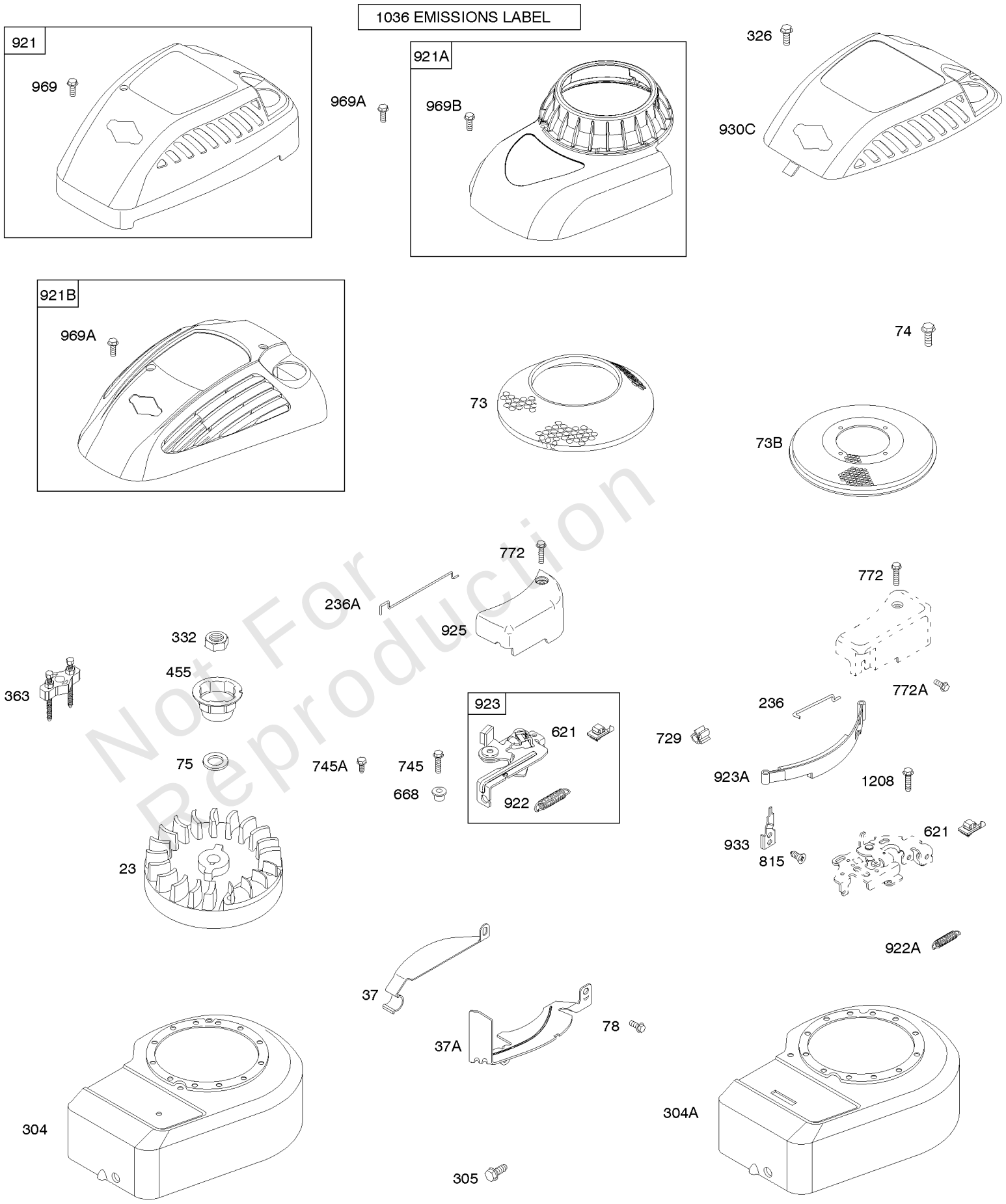

Not For Reproduction

Blower Housing/Shrouds, Brake, Flywheel

REF NO	PART NO	QTY	DESCRIPTION
923A	394867		PIVOT, Band Brake -Used Before Code Date 97071400
930C	691932		GUARD-REWIND
933	690428		PIVOT, Band Brake
969	692198		SCREW -(Blower Housing) (1/2)
969A	694046		SCREW -(Blower Housing) (2 1/4)
1036	-----		Label-Emissions -(Available From A Briggs & Stratton Authorized Dealer)
1208	690859		SCREW -(Brake Bracket)

Not For Reproduction

Copyright © Briggs & Stratton. All Rights reserved

Camshaft, Crankcase Cover/Sump, Crankshaft, Piston/Rings/Connecting Rod

Mfg. No: 10A902-0182-01

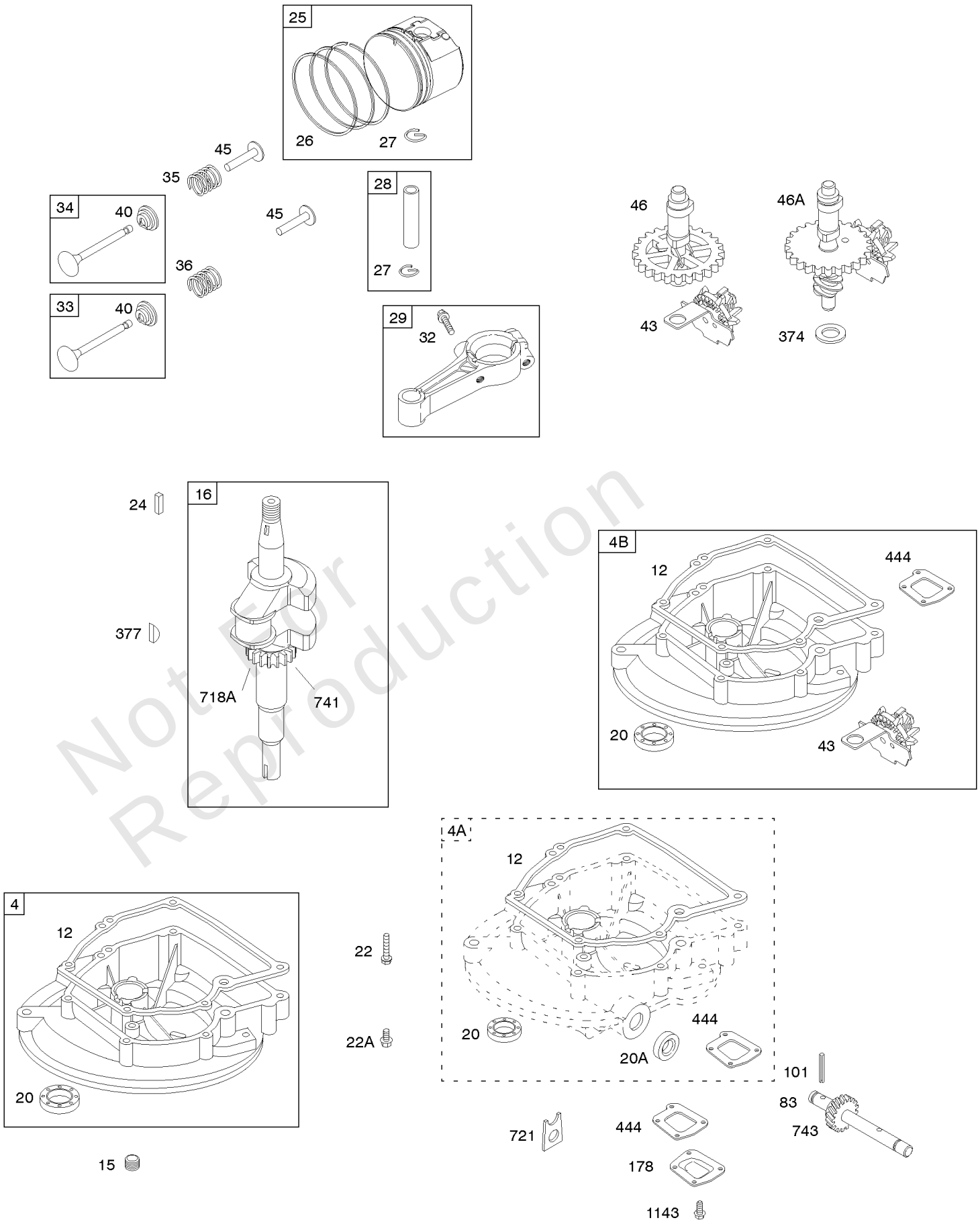

Not For Reproduction

Copyright © Briggs & Stratton. All Rights reserved

REF NO	PART NO	QTY	DESCRIPTION
4	395384		SUMP, Engine -Used Before Code Date 02111300
4	698691		SUMP, Engine -Used After Code Date 02111200
12	270895		GASKET, Crankcase -(.005)
12	270896		GASKET, Crankcase -(.009)
12	692218		GASKET, Crankcase -(.015)(Standard)
15	691680		PLUG, Oil Drain
16	691406		CRANKSHAFT
20	391483S		SEAL, Oil -(PTO Side)
20A	691952		SEAL, Oil -(PTO Side) (Auxiliary PTO)
22	692551		SCREW -(Crankcase Cover/Sump) (1 1/4)
22A	691108		SCREW -(Crankcase Cover/Sump) (3/4" Long)
24	222698S		KEY, Flywheel
25	792532		PISTON ASSEMBLY -(.020 Oversize) -Used After Code Date 96020500
25	298906		PISTON ASSEMBLY -(.020 Oversize) -Used Before Code Date 96020600
25	298907		PISTON ASSEMBLY -(.030 Oversize) -Used Before Code Date 96020600
25	699657		PISTON ASSEMBLY -(Standard) -Used Before Code Date 04111500
25	790908		PISTON ASSEMBLY -(Standard) -Used After Code Date 04111400
26	795134		SET, Ring -(.020 Oversize) -Used After Code Date 04111400
26	298982		RING SET-STD -(Standard) -Used Before Code Date 96020600
26	298984		RING SET-020 -(.020 Oversize) -Used Before Code Date 96020600
26	498680		RING SET-STD -(Standard) -Used After Code Date 96020500 -Used Before Code Date 03080400
26	498682		SET, Ring -(.020 Oversize) -Used After Code Date 96020500 -Used Before Code Date 04111500
26	498683		SET, Ring -(.030 Oversize) -Used After Code Date 96020500 -Used Before Code Date 04111500
26	699658		SET, Ring -(Standard) -Used After Code Date 03080300 -Used Before Code Date 04111500
26	790909		SET, Ring -(Standard) -Used After Code Date 04111400

Not For Reproduction

Copyright © Briggs & Stratton. All Rights reserved

Camshaft, Crankcase Cover/Sump, Crankshaft, Piston/Rings/Connecting Rod

Mfg. No: 10A902-0182-01

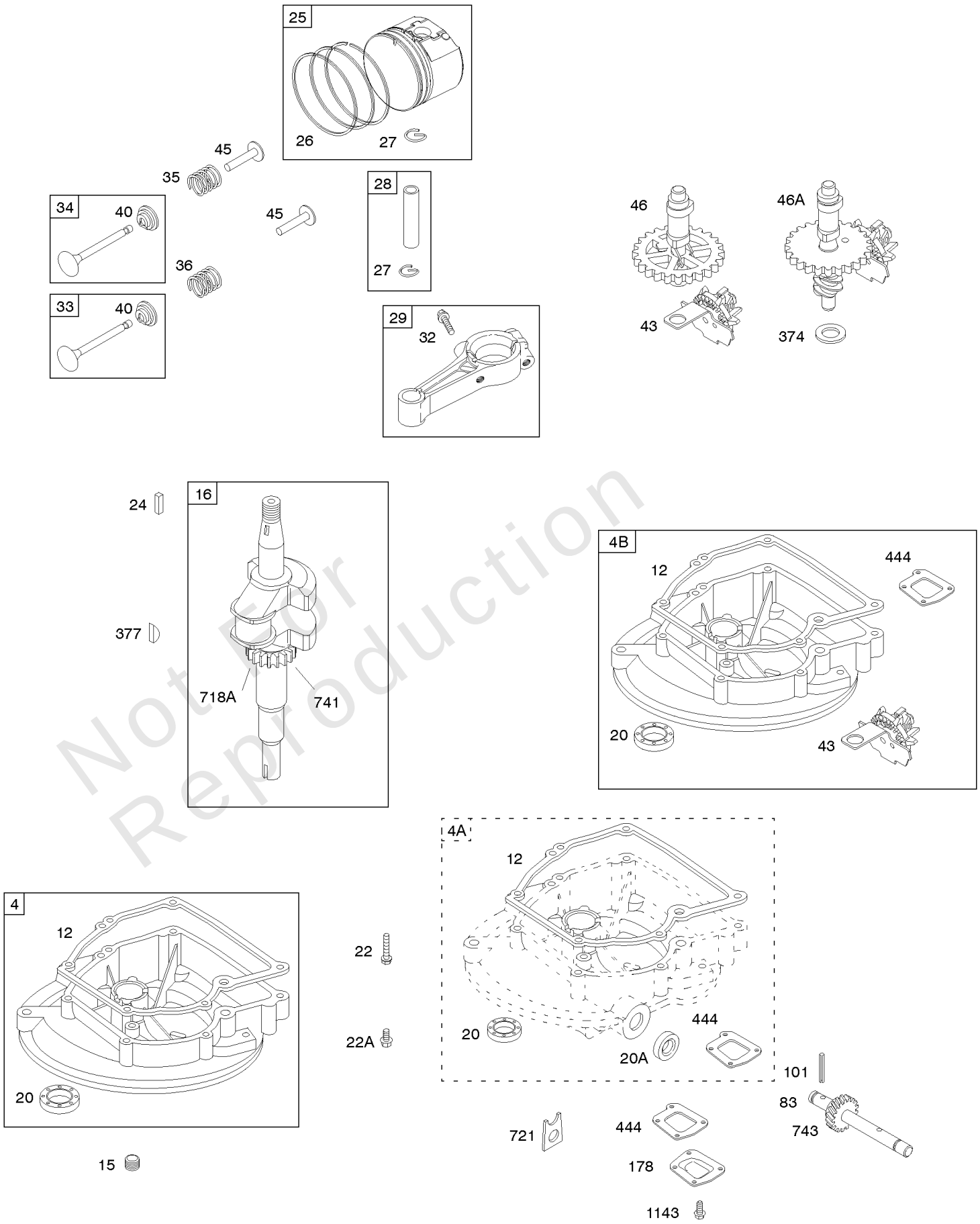

Not For Reproduction

Copyright © Briggs & Stratton. All Rights reserved

REF NO	PART NO	QTY	DESCRIPTION
27	691588		LOCK, Piston Pin
28	298908		PIN, Piston -(.005 Oversize) -Used Before Code Date 03100100
28	298909		PIN. Piston -(Standard) -Used Before Code Date 03100100
28	699659		PIN, Piston -(Standard) -Used After Code Date 03093000
29	699654		ROD-CONNECTING
32	691664		SCREW -(Connecting Rod)
33	296676		VALVE, Exhaust -(Grooved Stem-Includes Retainer)
34	296677		VALVE, Intake -(Grooved stem-includes Retainer)
35	690520		SPRING-VALVE -(Intake)
36	690520		SPRING-VALVE -(Exhaust)
40	692194		RETAINER, Valve
43	691983		SLINGER, Governor/Oil -Used Before Code Date 02110500
43	698690		SLINGER-GOVERNOR/OIL -Used After Code Date 02110400
45	691762		TAPPET, Valve
46	691998		CAMSHAFT
46A	690644		CAMSHAFT -(Counterclockwise)
101	691623		PIN, Shaft
178	690398		COVER, Drive Gear
374	691074		WASHER -(Camshaft)
444	691868		GASKET, Drive Gear Cover
718A	499047		PIN, Locating -(Crankshaft)
721	690397		STOP, Shaft
741	691805		GEAR, Timing
743	691772		GEAR, Drive -(Counterclockwise)
1143	691141		SCREW -(Drive Gear Cover)

Not For Reproduction

Copyright © Briggs & Stratton. All Rights reserved

Mfg. No: 10A902-0182-01

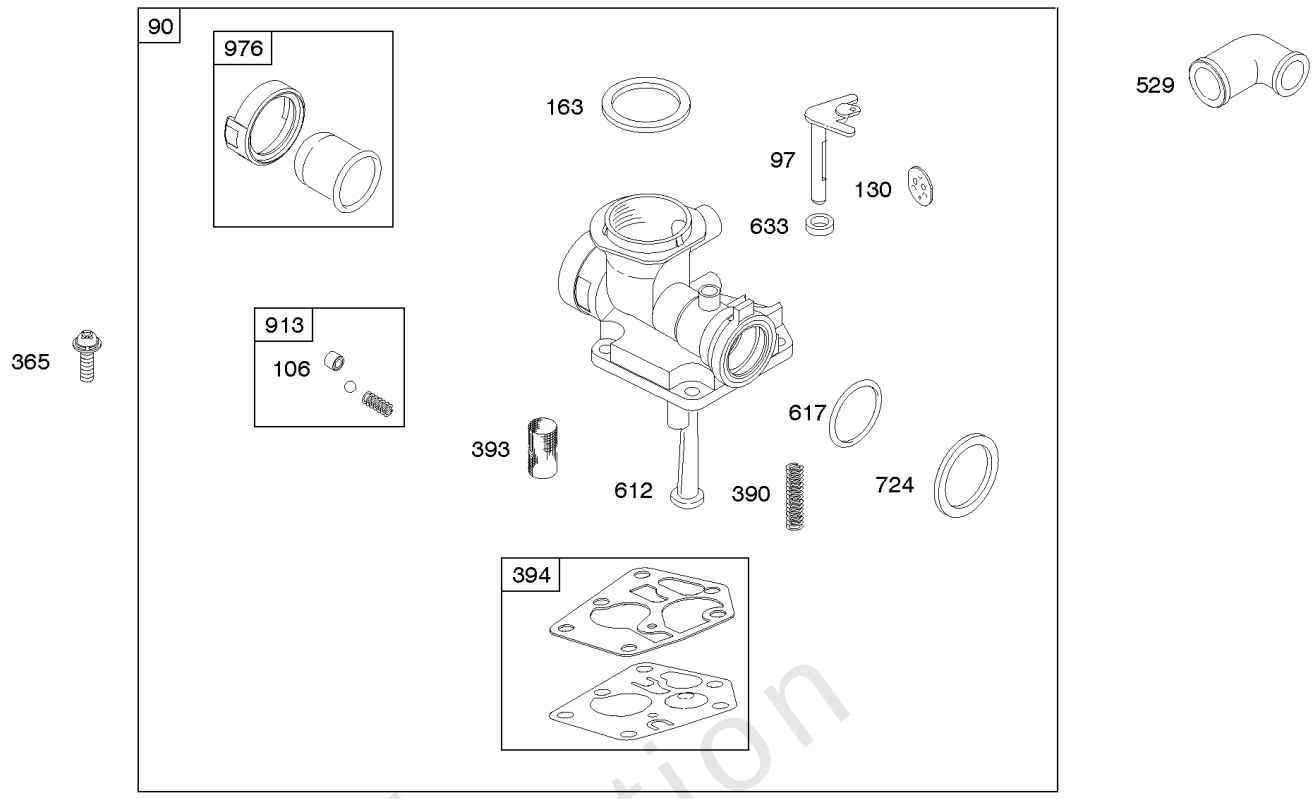

Not For Reproduction

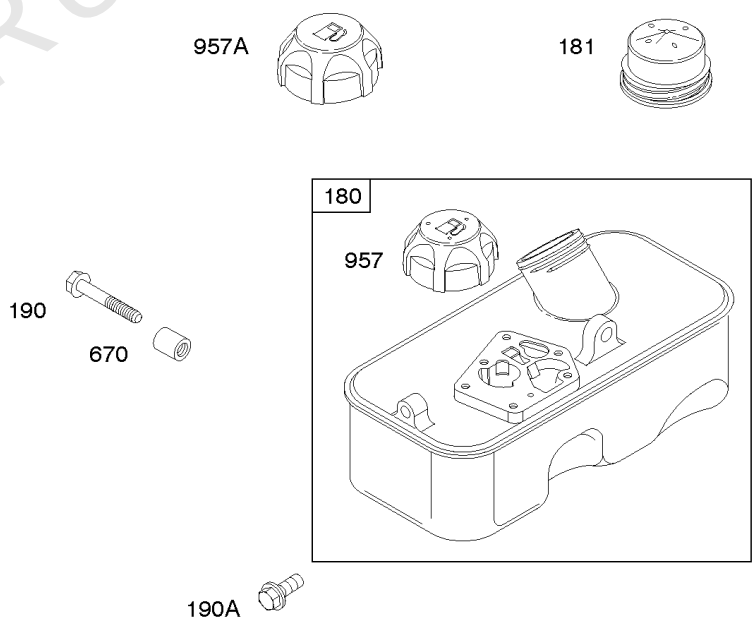

Carburetor, Fuel Supply

REF NO	PART NO	QTY	DESCRIPTION
90	497619		CARBURETOR -Used Before Code Date 96052000
90	794161		CARBURETOR -Used After Code Date 96051900
97	691931		SHAFT, Throttle
106	691901		SEAT, Inlet
130	691190		VALVE, Throttle
163	271139S		GASKET, Air Cleaner -(Air Cleaner)
180	494406		TANK, Fuel -(Metal)
181	493982S		CAP, Fuel Tank -(Metal)
190	691640		SCREW -(Fuel Tank) (1 3/4)
190A	691108		SCREW -(Fuel Tank) (9/16" Long)
365	790029		SCREW -(Carburetor)
390	691839		SPRING-CHOKE DIAPH
393	691837		SCREEN, Carburetor
394	795083		DIAPHRAGM, Carburetor -Used After Code Date 07080800
394	495770		GASKET, Carburetor Pump -Used Before Code Date 07080900
529	692189		GROMMET
612	496046S		TUBE-PICK UP
617	270344S		SEAL, O-Ring -(Intake Manifold)
633	691321		SEAL-CHOKE/THR SHAFT -(Throttle)
670	691631		SPACER, Fuel Tank -Used Before Code Date 97071400
670	691633		SPACER, Fuel Tank -Used After Code Date 97071300
724	697478		RETAINER, Seal
913	494409		SEAT, Valve
957	497929S		CAP, Fuel Tank -(Plastic)
976	694394		PRIMER-CARBURETOR

Not For Reproduction

Copyright © Briggs & Stratton. All Rights reserved

Cylinder, Cylinder Head, Gasket Set - Engine, Gasket Set - Valve, Lubrication, Operator's

Mfg. No: 10A902-0182-01

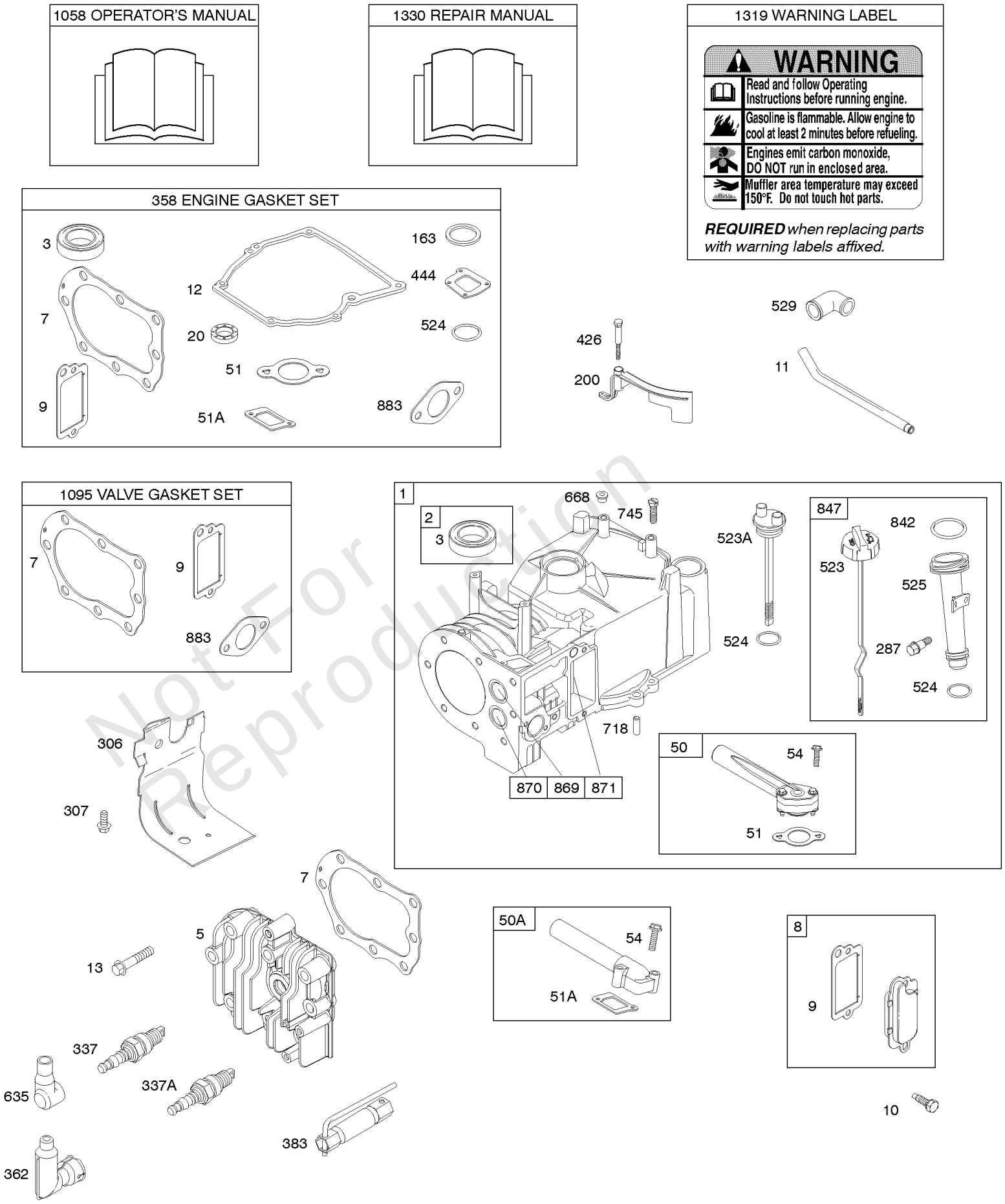

Not For Reproduction

Copyright © Briggs & Stratton. All Rights reserved

REF NO	PART NO	QTY	DESCRIPTION
1	699653		CYLINDER ASSEMBLY
2	399269		KIT, Bushing/Seal -(Magneto Side)
3	299819S		SEAL, Oil -(Magneto Side)
5	790169		HEAD, Cylinder
7	698717		GASKET-CYL HD
8	791781		BREATHER ASSEMBLY
9	695890		GASKET-BREATHER
10	691666		SCREW -(Breather Assembly)
11	691245		TUBE, Breather
12	270896		GASKET, Crankcase -(.009)
12	692218		GASKET, Crankcase -(.015)(Standard)
12	270895		GASKET, Crankcase -(.005)
13	691640		SCREW -(Cylinder Head)
20	391483S		SEAL, Oil -(PTO Side)
50	699644		MANIFOLD, Intake -Used After Code Date 03080300
50A	693446		MANIFOLD-INTAKE -Used Before Code Date 03080400
51	699649		GASKET, Intake -Used After Code Date 03080300
51A	270345S		GASKET, Intake -Used Before Code Date 03080400
54	691111		SCREW -(Intake Manifold)
163	271139S		GASKET, Air Cleaner -(Air Cleaner)
200	691912		BLADE, Governor
287	691002		SCREW -(Dipstick Tube)
306	690400		SHIELD, Cylinder -Used Before Code Date 04071400
307	690345		SCREW -(Cylinder Shield) -Used Before Code Date 04071400
337	802592S		PLUG, Spark -(Resistor)
358	794209		GASKET SET, Engine
383	89838S		WRENCH-SPARK PLUG
426	691107		SCREW -(Governor Blade)
444	691868		GASKET, Drive Gear Cover
523	692040		DIPSTICK
524	691876		SEAL, O-Ring
525	691320		TUBE, Dipstick
529	692189		GROMMET
635	66538S		BOOT, Spark PLug
668	692889		SPACER
718	690959		PIN, Locating -(Cylinder)

Not For Reproduction

Copyright © Briggs & Stratton. All Rights reserved

Cylinder, Cylinder Head, Gasket Set - Engine, Gasket Set - Valve, Lubrication, Operator's

Mfg. No: 10A902-0182-01

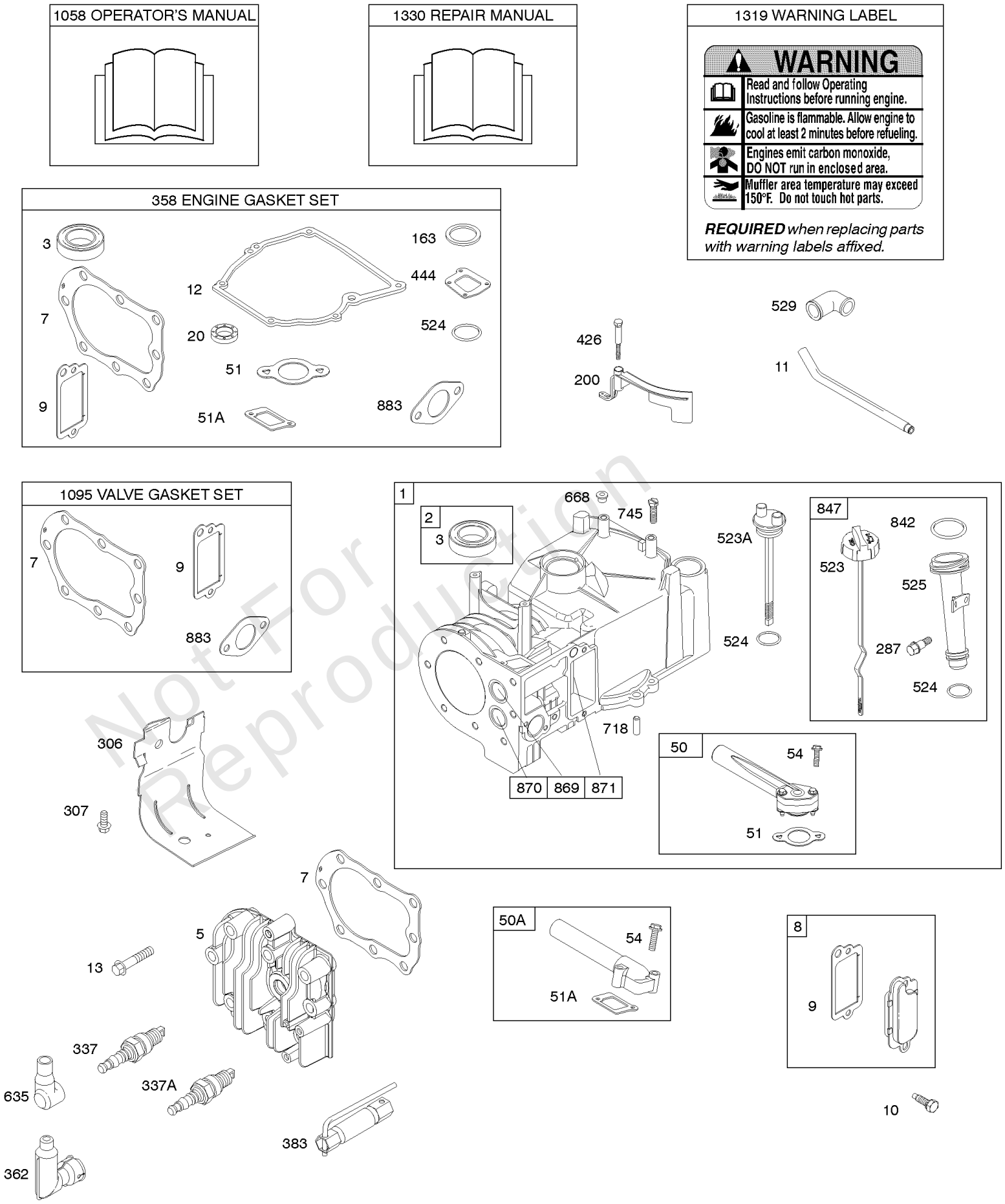

Not For Reproduction

Copyright © Briggs & Stratton. All Rights reserved

REF NO	PART NO	QTY	DESCRIPTION
745	691146		SCREW -(Brake) (7/8)
842	691870		SEAL, O-Ring -(Dipstick Tube)
847	691440		DIPSTICK/TUBE ASSY
869	699641		SEAT, Valve -(Intake) -Used After Code Date 03080300
869	691701		SEAT-VALVE -(Intake) -Used Before Code Date 03080400
870	699642		SEAT, Valve -(Exhaust) -Used After Code Date 03080300
870	691702		SEAT, Valve -(Exhaust) -Used Before Code Date 03080400
871	231348		BUSHING-VALVE GUIDE -(Exhaust) -Used Before Code Date 03080400
871	699643		BUSHING, Valve Guide -(Exhaust) -Used After Code Date 03080300
871	63709		BUSHING, Valve Guide -(Intake)
883	691880		GASKET-EXHAUST
1058	277038		MANUAL, Operator's
1095	498526		GASKET SET, Valve
1319	794467		LABEL, Warning
1330	270962		REP MAN-1 CYL L-HD

Not For Reproduction

Copyright © Briggs & Stratton. All Rights reserved

Exhaust System

Mfg. No: 10A902-0182-01

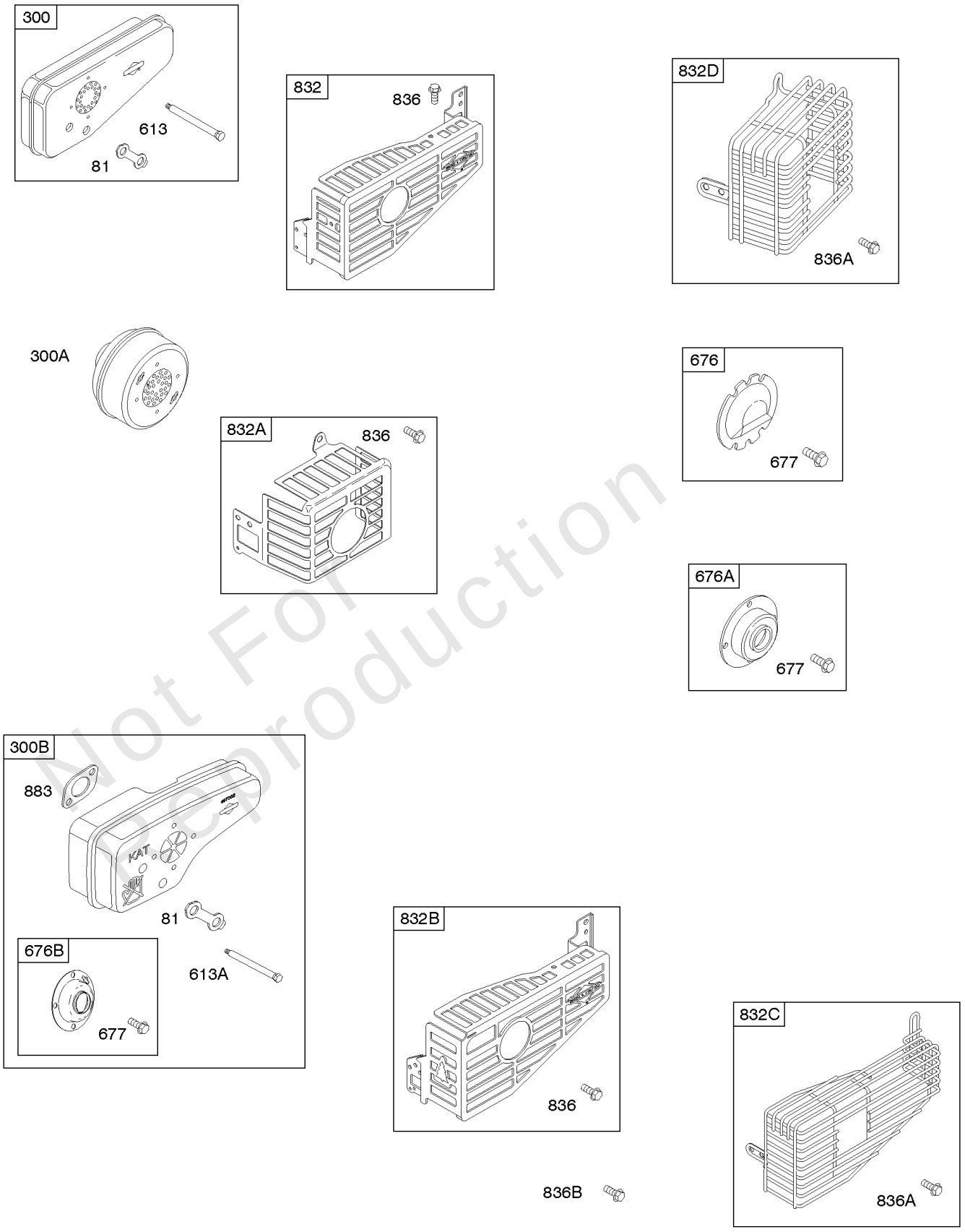

Not For Reproduction

Exhaust System

REF NO	PART NO	QTY	DESCRIPTION
81	691179		LOCK, Muffler Screw
300	692307		MUFFLER -(Super Lo Tone)
300A	394569S		MUFFLER -(Round Lo Tone)
613	691413		SCREW -(Muffler) (Super Lo Tone)
676	393756		DEFLECTOR, Muffler -(Side Outlet)
677	690661		SCREW -(Muffler Deflector)
832	699299		GUARD, Muffler -(Super Lo Tone)
832A	699670		GUARD-MUFFLER -(Round Lo Tone)
836	690664		SCREW -(Muffler Guard) (13/32)
836A	790745		SCREW -(Muffler Guard) (1/2)
883	691880		GASKET-EXHAUST

Not For Reproduction

Copyright © Briggs & Stratton. All Rights reserved

Replacement Engine - US & Canada

REF NO	PART NO	QTY	DESCRIPTION
	10T8020016	1	Replacement Engine
	-----		Top No-Load Speed: 3000 -Trim: ALL
	-----		Service Note: Replacement engine listed is not available in the State of California. Repair with individual parts.

Not For Reproduction

Rewind Starter

Mfg. No: 10A902-0182-01

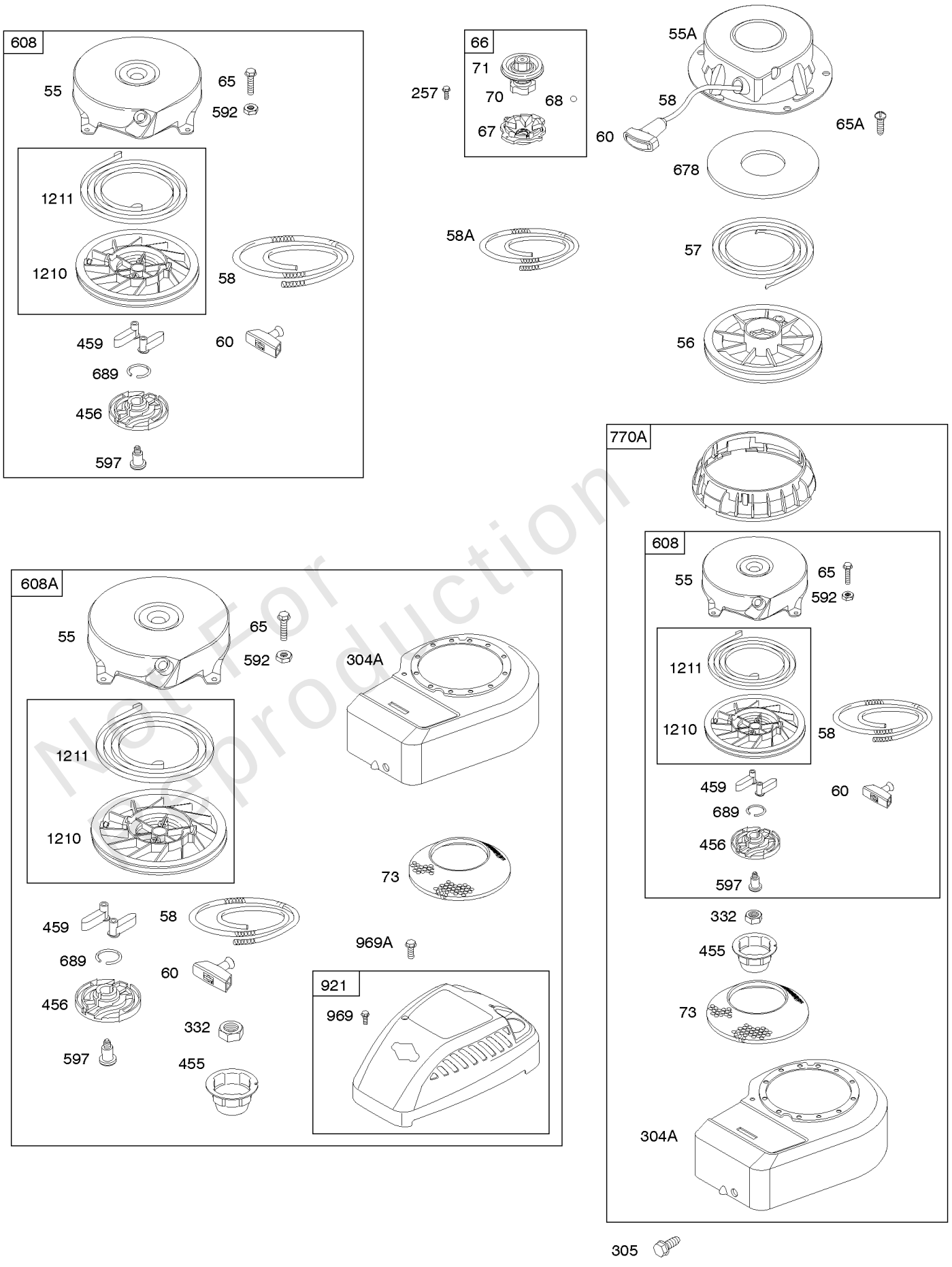

Not For Reproduction

Rewind Starter

REF NO	PART NO	QTY	DESCRIPTION
55	692144		HOUSING, Rewind Starter
55A	393576		HOUSING, Rewind Starter
56	280439S		PULLEY, Rope Starter
57	490179		SPRING-REWIND STR
58	691921		ROPE, Starter -(70)
58A	697316		ROPE, Starter -(88 5/8)
60	691915		GRIP, Starter Rope
65	690837		SCREW -(Rewind Starter)
65A	690338		SCREW -(Rewind Starter) (3/8)
66	399671		CLUTCH-STARTER
67	394897		HOUSING, Clutch
68	691604		BALL, Clutch
70	691945		RATCHET-CLUTCH
71	691359		COVER, Ratchet
73	699850		SCREEN, Rotating -Used After Code Date 97052500
257	691660		SCREW -(Starter Clutch)
304A	694236		HOUSING-BLOWER -(Compliance Engines) -Used After Code Date 99010300
304A	694051		HOUSING-BLOWER -(Non Compliance Engines) -Used After Code Date 99010300
305	692198		SCREW -(Blower Housing)
332	690662		NUT -(Flywheel)
455	691236		CUP, Flywheel
456	692299		PLATE-PAWL FRICTION
459	281505S		PAWL-RATCHET
592	690800		NUT -(Rewind Starter)
597	691696		SCREW -(Pawl Friction Plate)
608	499706		STARTER, Rewind -(88 5/8 Rope) -Used After Code Date 97071300
608A	499926		KIT STARTER-REWIND -(Non Compliance Engines) (70 Rope)
678	490817		SPACER-REWIND -(Rewind)
689	691855		SPRING-FRICTION
770A	499915		KIT, Rewind/Blower Housing -(Compliance Engines) -Used Before Code Date 97100600
921	694044		HOUSING, Blower
969	692198		SCREW -(Blower Housing) (1/2)
969A	694046		SCREW -(Blower Housing) (2 1/4)
1210	499901		PULLEY/SPRING ASSY -(Pulley)
1211	499901		PULLEY/SPRING ASSY -(Spring)

Not For Reproduction

Copyright © Briggs & Stratton. All Rights reserved

Copyright © Briggs & Stratton. All Rights reserved