BRIGGS & STRATTON™

10 GAL OIL FREE AIR COMPRESSOR

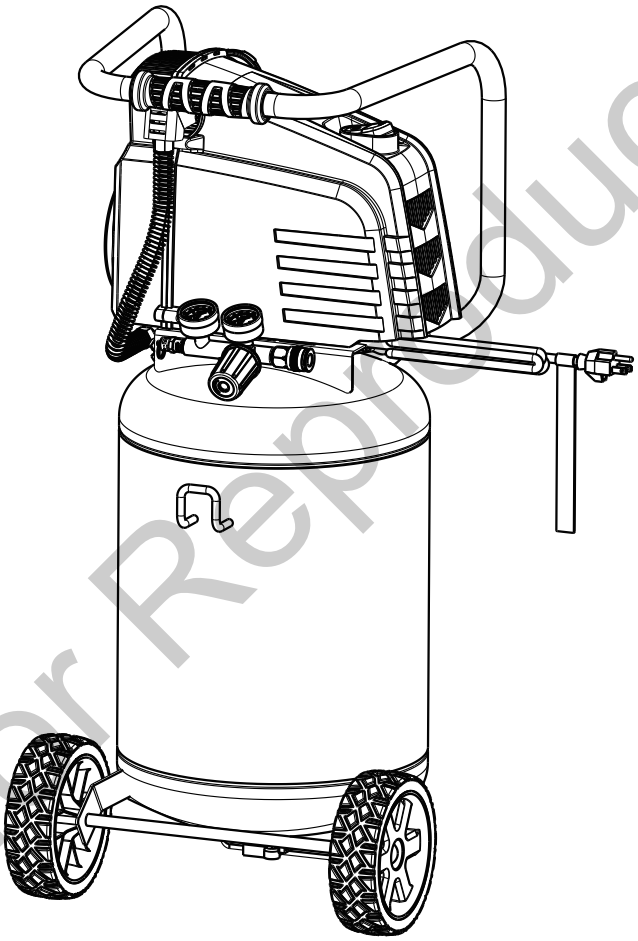

Not for Reproduction

Product Model # 074063-00
Manual # 80018807

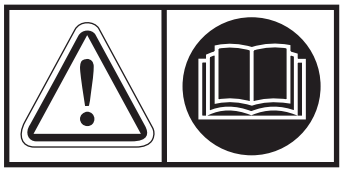

Read and understand this operator's manual thoroughly before using the product. It contains important information for your safety as well as operating and maintenance advice.

BRIGGS & STRATTON CORPORATION,
MILWAUKEE, WISCONSIN, U.S.A.

Thank you for purchasing this quality-built **Briggs & Stratton ™** air compressor. We are pleased that you've placed your confidence in the **Briggs & Stratton** brand. When operated and maintained according to the instructions in this manual, your Briggs &Stratton air compressor will provide many years of dependable service.

Where to find us

You can contact **Briggs & Stratton** Customer Service by phone at **(800) 743-4115**, or on the Internet at BRIGGSandSTRATTON.COM.

Date Purchased

Not for Reproduction

(EN) CONGRATULATIONS ON YOUR NEW PRODUCT PURCHASE!

Thank you for choosing a product from the Briggs & Stratton family of brands. We are honored that you chose us as your power equipment provider.

WE STRIVE TO CREATE HELPFUL, DEPENDABLE PRODUCTS THAT YOU CAN RELY ON FOR YEARS TO COME, WHILE COUNTING ON US TO SUPPORT YOU THROUGH THE LIFE OF YOUR PRODUCT.

Registering your product is the first step towards receiving the best post-sale experience. To begin, go to onlineproductregistration.com or scan the code below from your mobile device.

Benefits include:

- Confirmation of warranty coverage eligibility
- More efficient parts and service support
- Product updates
- Helpful maintenance and usage tips
- Discounts and offers on future products

After registering you will receive a confirmation email that includes an invitation to rate and review your new product online.

Whether you absolutely love your new product or have a suggestion to enhance it, we'd love to hear from you and value your feedback.

At your service,

David Cluka, Director of Customer Experience
Briggs & Stratton Corporation

SCAN THIS CODE to start the registration process on your mobile device. Data rates apply.

Not for Reproduction

Table of Contents

PRODUCT REGISTRATION FORM..... 3

SAFETY GUIDELINES..... 5

KEY PARTS DIAGRAM..... 7

PARTS DESCRIPTION..... 8

ASSEMBLY INSTRUCTIONS..... 9

OPERATING INSTRUCTIONS..... 10

CARE AND MAINTENANCE..... 11

TROUBLESHOOTING..... 12

WARRANTY..... 14

TECHNICAL SPECIFICATIONS..... 15

EXPLODED VIEW..... 16

PARTS LIST..... 17

Not for Reproduction

SAVE THESE INSTRUCTIONS

This manual contains important safety and operating instructions.
Read all instructions and follow them with use of this product.

Safety Guidelines

Important Safety Information

The manufacturer cannot possibly anticipate every possible circumstance that might involve a hazard. The warnings in this manual, and the tags and decals affixed to the unit are, therefore, not all-inclusive. If you use a procedure, work method, or operating technique that the manufacturer does not specifically recommend, you must satisfy yourself that it is safe for you and others. You must also make sure that the procedure, work method, or operating technique that you choose does not render the compressor unsafe.

Safety Symbols and Meanings

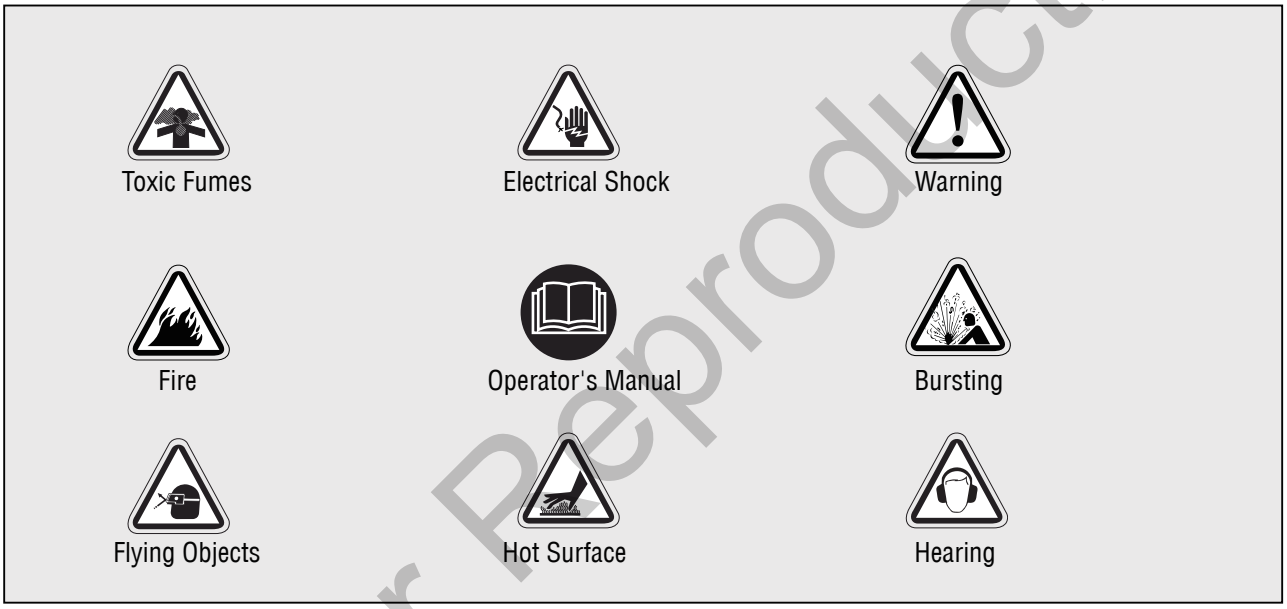

⚠ The safety alert symbol indicates a potential hazard to personal injury. A signal word (DANGER, WARNING, or CAUTION) is used with the alert symbol to designate a degree or level of hazard seriousness. A safety symbol may be used to represent the type of hazard. The signal word *NOTICE* is used to address practices not related to personal injury.

⚠ **DANGER** indicates a hazard which, if not avoided, *will* result in death or serious injury.

⚠ **WARNING** indicates a hazard which, if not avoided, *could* result in death or serious injury.

⚠ **CAUTION** indicates a hazard which, if not avoided, *could* result in minor or moderate injury.

Notice address practices not related to personal injury.

Not for Reproduction

Safety Information

DO NOT OPERATE THIS UNIT UNTIL YOU READ AND UNDERSTAND THIS INSTRUCTION MANUAL FOR SAFETY, OPERATION, AND MAINTENANCE INSTRUCTIONS.

⚠ WARNING

Risk of fire caused by sparks from motor and pressure switch could result in death or serious injury. Do not operate compressor near flammable gas or vapor. Never store flammable liquids or gases in vicinity of compressor.

High pressure air could result in death or serious injury. Never operate above maximum operating pressure of the spray gun or tool. Drain water from tank after each use.

- Do not weld or repair tank.
- Do not operate with pressure switch or safety valve set above maximum allowable working pressure.

Hot compressor surfaces could result in serious injury. Allow compressor to cool before touching.

Inhalation hazard. Using compressor to supply breathing air could result in death or serious injury. Do not use compressor to supply breathing air.

Risk of fire could result in death or serious injury.

- Do not spray flammable materials in vicinity of any flame or ignition sources including the compressor unit.
- Do not restrict compressor ventilation openings or place objects against or on top of compressor. Operate compressor only in a clean, dry, well ventilated area.
- Do not operate unattended. Always turn off and unplug unit when not in use.

Risk of serious eye injury. Always wear ANSI Z87.1 approved safety glasses when using air compressor. Do not spray any part of the body.

Always wear hearing protection when using an air compressor. Failure to do so may result in hearing loss.

Shock risk could result in death or serious injury. Only connect compressor to a properly grounded receptacle. KEEP CHILDREN AWAY FROM THE AIR COMPRESSOR AT ALL TIMES.

Not for Reproduction

Key Parts Diagram

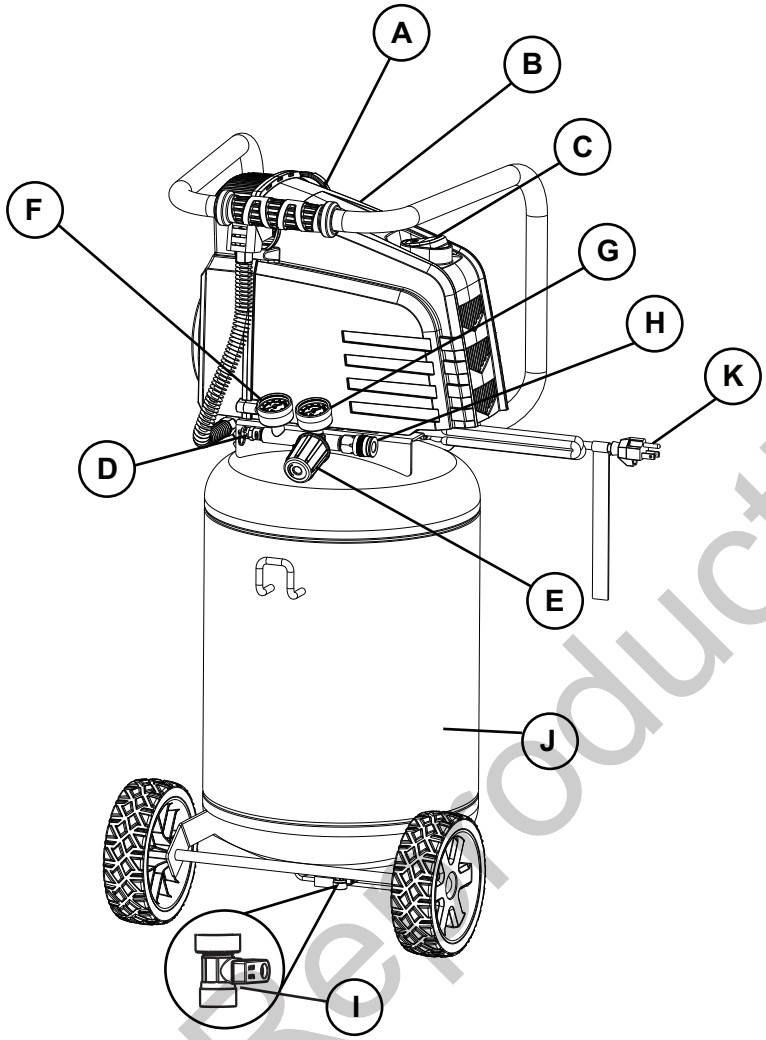

A.	ELECTRIC MOTOR	G.	OUTLET PRESSURE GAUGE
B.	AIR COMPRESSOR PUMP	H.	AIR OUTLET
C.	ON/OFF SWITCH	I.	AIR TANK BALL VALVE
D.	SAFETY VALVE	J.	AIR TANK
E.	AIR PRESSURE REGULATOR	K.	POWER CORD
F.	TANK PRESSURE GAUGE		

Not for Reproduction

Parts Description

A. ELECTRIC MOTOR: The motor is used to power the pump. It is equipped with a thermal overload protector. If the motor overheats for any reason, the thermal overload protector will shut it down in order to prevent the motor from being damaged.

B. AIR COMPRESSOR PUMP: The pump compresses the air and discharges it into the tank via the piston that moves up and down in the cylinder.

C. ON/OFF SWITCH: This switch turns on the compressor and is operated manually. When in the ON position, it allows the operated manually. When in the ON demand. ALWAYS set this switch to OFF when the compressor is not being used and before unplugging the compressor.

D. SAFETY VALVE: This valve is used to prevent system failure by draining pressure from the system when it reaches a preset level if the pressure switch has not shut down the motor. It will pop open automatically, or it can be activated manually by pulling the ring on the valve.

⚠ **WARNING:** Never exceed the maximum working pressure of the tool.

E. AIR PRESSURE REGULATOR: The regulator is used to adjust the pressure inside the line to the tool that is being used. Turn the knob clockwise to increase the pressure and counterclockwise to decrease the pressure.

F. TANK PRESSURE GAUGE: The gauge measures the pressure level of the air that is stored in the tank. It cannot be adjusted by the operator and it does not indicate the pressure inside the line.

G. OUTLET PRESSURE GAUGE: The gauge measures the regulated outlet pressure.

⚠ **WARNING**

Never attempt to open the drain valve when the tank pressure is more than 10 PSI.

H. AIR OUTLET: The outlet is connected to quick connect.

I. AIR TANK BALL VALVE: The drain valve is used to remove moisture from the air tank after the compressor is shut off.

J. AIR TANK: The tank is where the compressed air is stored.

K. POWER CORD: This compressor should be used on a nominal 120 V grounded circuit. Use a power cord that is equipped with a grounding plug. Verify that the compressor is plugged into an outlet that has the same configuration as the plug. Do not use an adapter with this compressor.

Check with a licensed electrician if the grounding instructions are not understood or there is doubt as to whether the product is properly grounded. Do not modify the plug provided. If it will not fit the outlet, have the proper outlet installed by a licensed electrician.

⚠ **DANGER**

Improper installation of the grounding plug will result in a risk of electric shock. If repair or replacement of the cord or plug is necessary, do not connect the grounding wire to either flat blade terminal. The grounding wire is in the green outer surface.

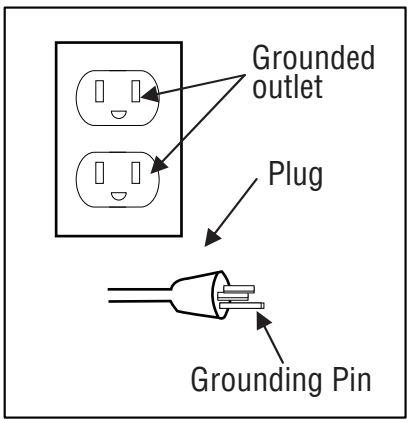

Figure 1

Not for Reproduction

Assembly Instructions

Assembly

1. Unpack the air compressor. Inspect the unit for damage. If the unit has been damaged, contact the retailer immediately.

THE CARTON SHOULD CONTAIN:

- Air compressor.
- Owner' s manual.

2. Check the air compressor's identification label to ensure that you have purchased the intended model and that it has the required pressure rating for its intended use.

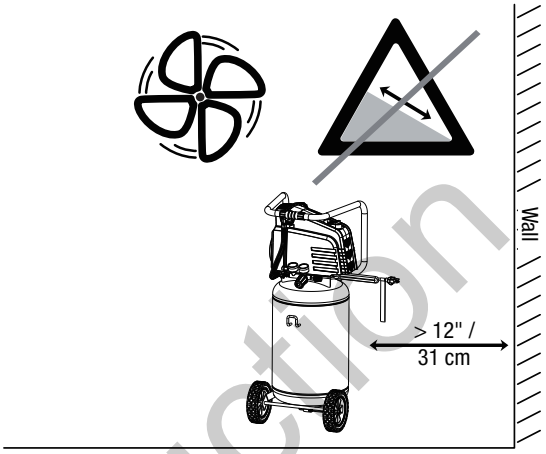

3. Positioning of the air compressor:

a. Position the air compressor near an electrical outlet.

b. The compressor must be at least 12" (31 cm) from any wall or obstruction, in a clean, well-ventilated area to ensure sufficient air flow and cooling.

c. Place the air compressor on the floor or a hard, level surface. The air compressor must be level to ensure proper drainage.

4. Connect air hose to compressor.

- Connect air hose (not provided) to the compressor's air outlet.

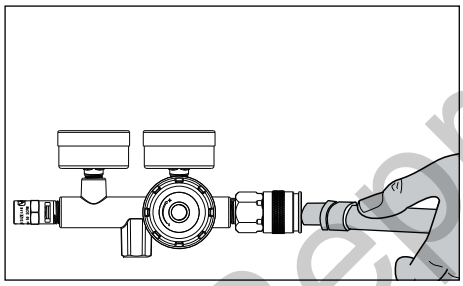

Not for Reproduction

Operating Instructions

BEFORE EACH START UP

1. Set the ON/OFF switch (C) to the O (off) position.
2. Turn the air pressure regulator knob (E) counterclockwise until it stops.
3. Attach air hose/accessories or air tools (not included) to the air line outlet (H).

⚠ **WARNING!** ⚠ **Risk of bursting.** Too much air pressure causes a hazardous risk of bursting. Check the manufacturer's maximum pressure rating for air tools and accessories. The regulator outlet pressure must never exceed the maximum pressure rating.

HOW TO START UP

1. Close the air tank ball valve (I) by turning clockwise.
2. Plug in the power cord (K).
3. Set the ON/OFF switch (C) to the I (on) position and allow tank pressure to build. Motor will stop when tank pressure reaches "cut-out" pressure.
4. Turn the air pressure regulator (E) clockwise until desired pressure is reached.
5. The compressor is ready for use.

⚠ **WARNING**

High temperatures are generated by the electric motor and the pump. To prevent burns or other injuries,

· DO NOT touch the compressor while it is running. Allow it to cool before handling or servicing.

· Keep children away from the compressor at all times.

When adjusting from a higher to a lower pressure, the knob counterclockwise past the desired setting. Then turn clockwise to reach the desired pressure.

· Do not exceed operating pressure of the tool or accessory being used.

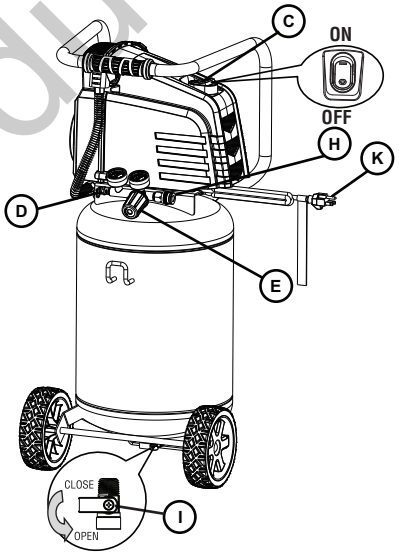

HOW TO SHUT DOWN

1. Set the ON/OFF switch (C) to the O (off) position.
2. Unplug the power cord (K).
3. Reduce the pressure in the tank through the outlet hose. Pulling the pressure relief valve ring (D) and keeping it open will also reduce the pressure in the tank.
4. Tip the compressor so the tank drain valve is at the bottom of the tank, then open the tank drain valve counterclockwise to allow moisture to drain from the tank.

⚠ **CAUTION!**

Escaping air and moisture can propel debr is that may cause eye injury. Wear safety glasses when opening the drain valve.

⚠ **WARNING!**

To avoid personal injury, always shut off and unplug the unit and relieve all air pressure from the system before performing any service on the air compressor.

Risk of unsafe operation. Unit cycles automatically when power is on. When performing maintenance, you may be exposed to voltage sources, compressed air or moving parts. Personal injuries can occur. Before performing any maintenance or repair, disconnect power source from the compressor and bleed off all air pressure.

Not for Reproduction

Care and Maintenance

WARNING: To avoid personal injury, always shut off and unplug the unit and relieve all air pressure from the system before performing.

Regular maintenance will ensure trouble-free operation.

TASK	DESCRIPTION	SERVICE INTERVAL
Drain the tank	To prevent corrosion inside the tank, the condensation must be drained at the end of every workday. Be sure to wear protective goggles. Relieve the air pressure in the system and then open the ball valve on the bottom of the tank. 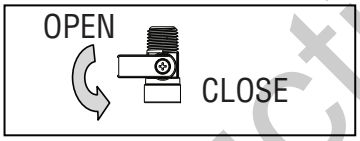	Daily
Check the relief valve	Pull the relief valve on the ring daily to ensure that it is operating properly and to clear the valve of any possible obstructions. 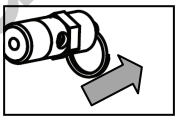	Daily
Clean the air filter	A dirty filter will reduce the unit's performance and life. To avoid any contamination inside the pump, the filter should be cleaned frequently and replaced on a regular basis. Foam filter should be cleaned in warm and soapy water. 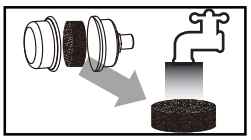	Weekly
Test for leakage	Check all connections to see if tight. A small leak of any of part (the tank, hoses, pipe connections or transfer tubes) will reduce the unit's performance. Spray a small amount of soapy water around the area of the suspected leak with a spray bottle. If bubbles appear, repair or replace the faulty component. Do not overtighten any connections.	Monthly
Storage	Before storing the unit for a long period, use an air blow gun to clean all dust and debris from the compressor. Disconnect and coil the power cord. Pull the pressure relief valve to release all pressure from the tank. Drain all moisture from the tank. Cover the entire unit to protect it from moisture and dust.	N/A

Not for Reproduction

Troubleshooting

PROBLEM	POSSIBLE CAUSE	CORRECTIVE ACTION
There is low pressure, not enough air, or the compressor does not stop.	1. The tank ball valve is open. 2. There is a leak in the fittings. 3. There is a prolonged or excessive use of air. 4. The compressor is not large enough. 5. There is a hole in the air hose. 6. The tank leaks. 7. The seals are blown. 8. The valve leaks. 9. There is a leaking or worn piston.	1. Close the ball valve. 2. Check fittings with soapy water. Tighten or reseal leaking fittings. DO NOT OVERTIGHTEN. 3. Decrease the amount of air used. 4. Check the air requirement of the accessory. If it is higher than the CFM and the pressure supplied by the compressor, you need a larger compressor. Most accessories are rated at 25% of the actual CFM while running continuously. 5. Check and replace if necessary. ⚠ **WARNING** 6. Immediately replace the tank. DO NOT attempt to repair. 7. Replace the compressor assembly. 8. Replace the compressor assembly. 9. Replace the compressor assembly.
Air leaks from the regulator or the regulator does not regulate air pressure.	The internal parts of the regulator are dirty or damaged.	Replace the regulator or internal parts.
The regulated pressure gauge reading drops when the air accessory is being used.	1. This is normal. 2. The compressor is not large enough.	1. If the pressure drops too low, adjust the regulartor while the accessory is used. 2. Check the air requirement of the accessory. If it is higher than the CFM and the pressure supplied by the compressor, you need a larger compressor. Most accessories are rated at 25% of the actual CFM while running continuously.
The pressure relief valve opens.	1. The tank pressure exceeds the normal rating pressure. 2. The pressure switch is stuck.	1. Replace the pressure switch. 2. Replace the pressure switch.

Not for Reproduction

Troubleshooting

PROBLEM	POSSIBLE CAUSE	CORRECTIVE ACTION
The motor will not run.	1. Tank pressure exceeds the preset pressure switch limit.	1. The motor will start automatically when the tank pressure drops below the tank cut-in pressure.
	2. The fuse is blown or the circuit breaker tripped.	2. Replace the blown fuse or reset the circuit breaker. Do not use a fuse or circuit breaker with a higher rating than specified for your branch circuit. Check for proper fuse; type T fuse is acceptable. Check for low voltage and proper extension cord size. Disconnect other applications from the circuit. Operate the compressor on a dedicated circuit.
	3. The check valve is stuck in the open position.	3. Remove and clean or replace.
	4. The wire gauge in the cord is wrong or the extension cord length is excessive.	4. Check for proper gauge and extension cord length.
	5. There are loose electrical connections.	5. Contact an authorized service center.
	6. The motor's thermal overload protection has tripped.	6. Turn the air compressor off, unplug the power cord and wait until the motor has cooled down. Plug in the power cord only after the motor has cooled down, waiting at least five minutes to make sure the thermal overload protector has recovered.
	7. The motor, capacitor or safety valve is defective.	7. Have the compressor serviced by a qualified technician.

Not for Reproduction

Briggs & Stratton™ Air Compressor Warranty Policy

October, 2015

LIMITED WARRANTY

BRIGGS & STRATTON™ is a trademark of BRIGGS & STRATTON CORPORATION and is used under license to Alton Industry Co. Ltd®. Alton Industry Co. Ltd warrants this Briggs & Stratton brand product for a period of one year from the date of original retail purchase against defects in materials and workmanship. Subject to the conditions and limitations described below, if Alton Industry Co. Ltd determines this product is covered under this warranty, it will be replaced with the same model or one of equal value or specification, at Alton Industry Co. Ltd's option. Alton Industry Co. Ltd will bear the cost of replacement. The purchaser must contact Alton Industry Co. Ltd® for all warranty authorizations.

There is no other express warranty. Implied warranties, including those of merchantability and fitness for a particular purpose, are limited to one year, or to the extent permitted by law. Liability for incidental or consequential damages are excluded to the extent exclusion is permitted by law. Some states or countries do not allow limitations on how long an implied warrant lasts, and some states of countries do not allow the exclusion or limitation of incidental or consequential damages, so the above limitation and exclusion may not apply to you. This warranty gives you specific legal rights and you may also have other rights which vary from state to state or country to country.

Save your proof of purchase receipt. If you do not provide proof of the initial purchase date at the time warranty service is requested, the manufacturing date of the product will be used to determine the warranty period. Product registration is not required to obtain warranty service on Briggs & Stratton products.

These are our standard warranty terms, but occasionally there may be additional warranty coverage that was not determined at time of publication. For a listing of current warranty terms for your air compressor, go to BRIGGSandSTRATTON.COM

This Limited warranty does not include the following:

A. Parts that are worn or broken or which have become inoperative due to abuse, misuse, accidental damage, neglect or lack of proper installation, operation or maintenance (as outlined in the applicable owner's manual or operating instructions) or product that has been used for industrial, professional, commercial or rental purposes;
B. Normal wear and tear or expendable parts or accessories that may be supplied with the product which are expected to become inoperative or unusable after a reasonable period of use;
C. Routine maintenance and consumable items such as, but not limited to fuel, lubricants, valves, belts, knobs, nuts, fluids, tune-ups, or adjustments;
D. Damage caused by repairs made or attempted by persons not authorized by the manufacturer;
E. Product that was sold to the original purchaser as reconditioned or refurbished product (unless otherwise specified in writing);
F. Product or parts thereof if any part from another manufacturer has been installed or any repairs or alterations have been made or attempted by unauthorized persons;
G. Normal deterioration of the exterior finish such as, but not limited to, scratches, dents, paint chips, nor any corrosion or discoloring by heat, abrasive and chemical cleaners;
H. Component parts sold by and identified as the product of another company, which shall be covered under the other product manufacturer's warranty, if any.

For questions about our warranty on this product, contact us at:
Alton Industry LTD. Group
1031 North Raddant Road
Batavia Illinois 60510
888-899-0146
info@altonindustries.com
www.altonindustries.com

Not for Reproduction

Product Specifications

Model No.	074063-00 / 0331046
Pump	Oil free, Direct drive, Single stage
Motor	1.5 HP†
Voltage/Amps/HZ	120/12/60
Air Tank Capacity	10 Gallon
Cut-in Pressure	120 PSI†
Cut-out Pressure	150 PSI†
CFM @ 40 PSI	5.0*
CFM @ 90 PSI	4.0*
Power Cord	SJT 16 AWG / 72 in. Length

NOTE: Avoid use of extension cords. If use of an extension cord cannot be avoided, the cord should be a minimum wire size of 12 AWG and no longer than 30 feet. Use only a 3-wire extension cord that has a 3-blade grounding plug and a 3-slot receptacle that will accept the plug on the product.

***CFM: Cubic Feet per Minute.**

† This compressor is rated in accordance with ISO 1217, displacement compressors acceptance tests.

Not for Reproduction

Exploded View

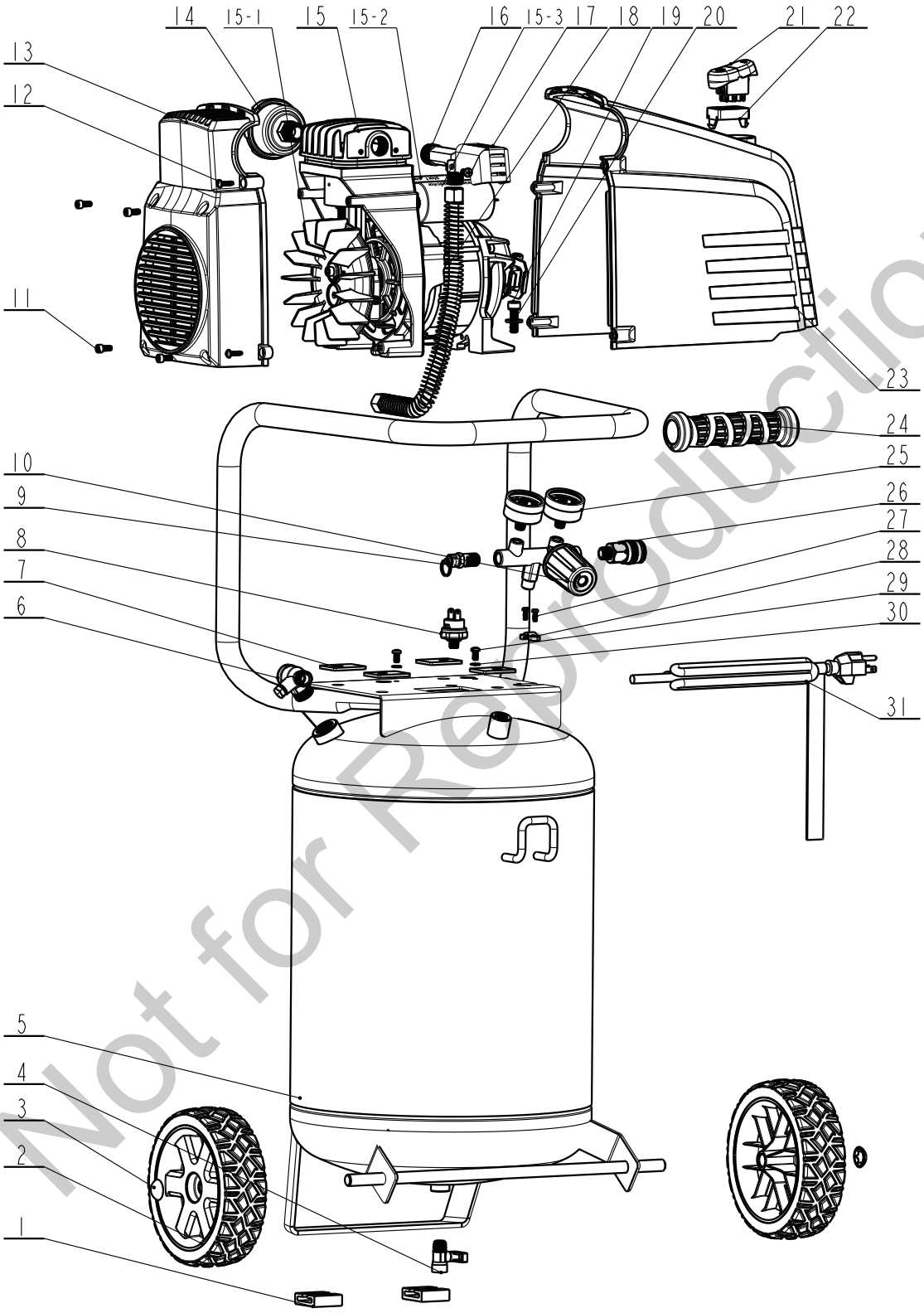

Not for Reproduction

Parts List

PART	DESCRIPTION	QTY
1	Rubber Foot	2
2	Wheel	2
3	Card Cap	2
4	Drain Valve	1
5	Air Tank	1
6	Check Valve	1
7	Shock Pad/beam	4
8	Pressure Switch	1
9	Safety Valve	1
10	Regulator	1
11	Screw M5 X 12	4
12	Screw ST3.9 X 16F	4
13	Rear Shroud	1
14	Air Filter	1
15	Motor Pump Assembly	1
15-1	Motor Impeller	1
15-2	Capacitor 200 µf	1

PART	DESCRIPTION	QTY
15-3	Capacitor 50 µf	1
16	Elbow Fitting	1
17	Metal Cover	1
18	Transfer Tube	1
19	Screw M8 X 25	4
20	Flat Washer 8	4
21	On/Off Switch	1
22	Switch Retainer	1
23	Front Shroud	1
24	Handle Grip	1
25	Pressure Gauge	2
26	Quick Coupler	1
27	Screw M4 X 10	2
28	Cord Clamp	1
29	Screw M5 X 10	4
30	Spring Washer	2
31	Power Cord	1

Not for Reproduction