Parts Manual

Mfg. No: 1042-3
2,250 PSI

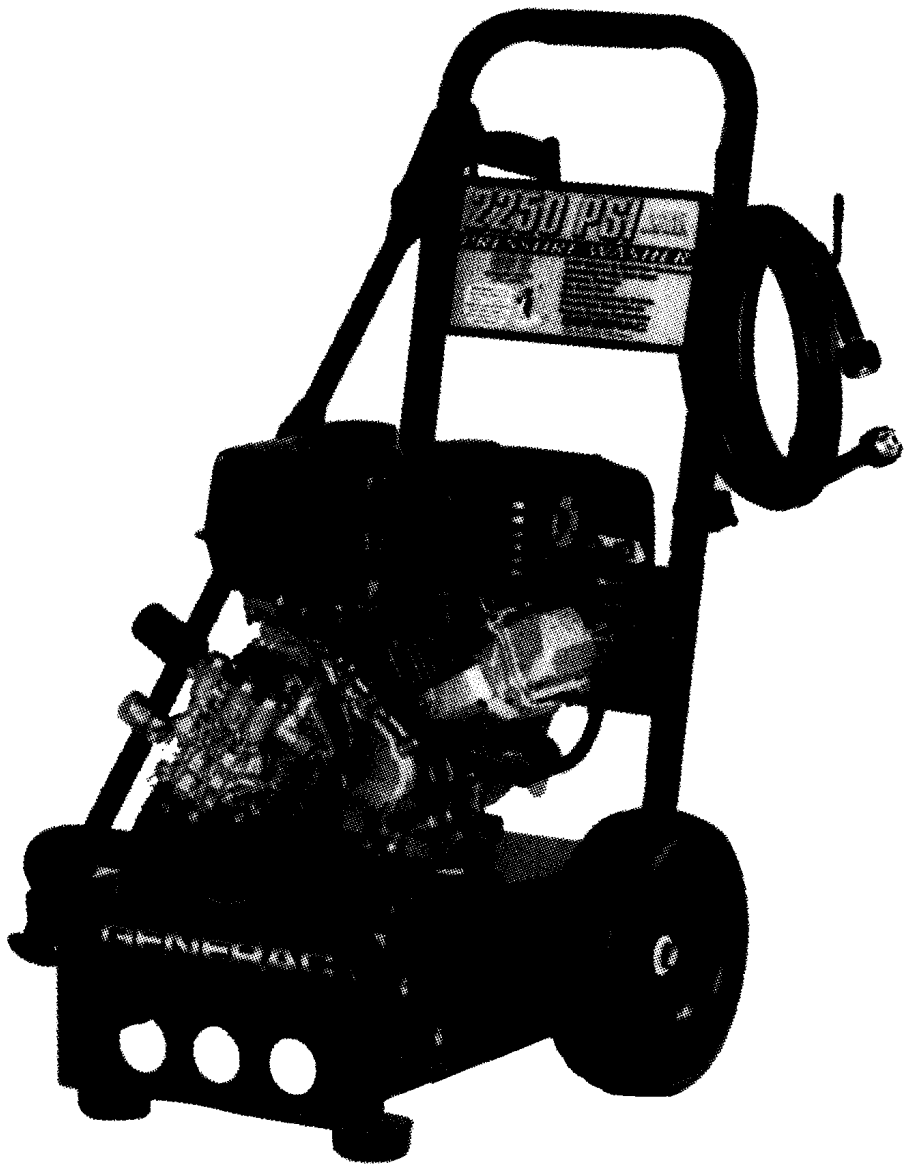

Copyright © Briggs & Stratton. All Rights reserved

Model Components

Page

Pressure Washer. 4
Pump. 6
Torque Specification Chart. 10

Not For Reproduction

Copyright © Briggs & Stratton. All Rights reserved

Note: Unless noted otherwise, use the standard torque specifications

Mfg. No: 1042-3

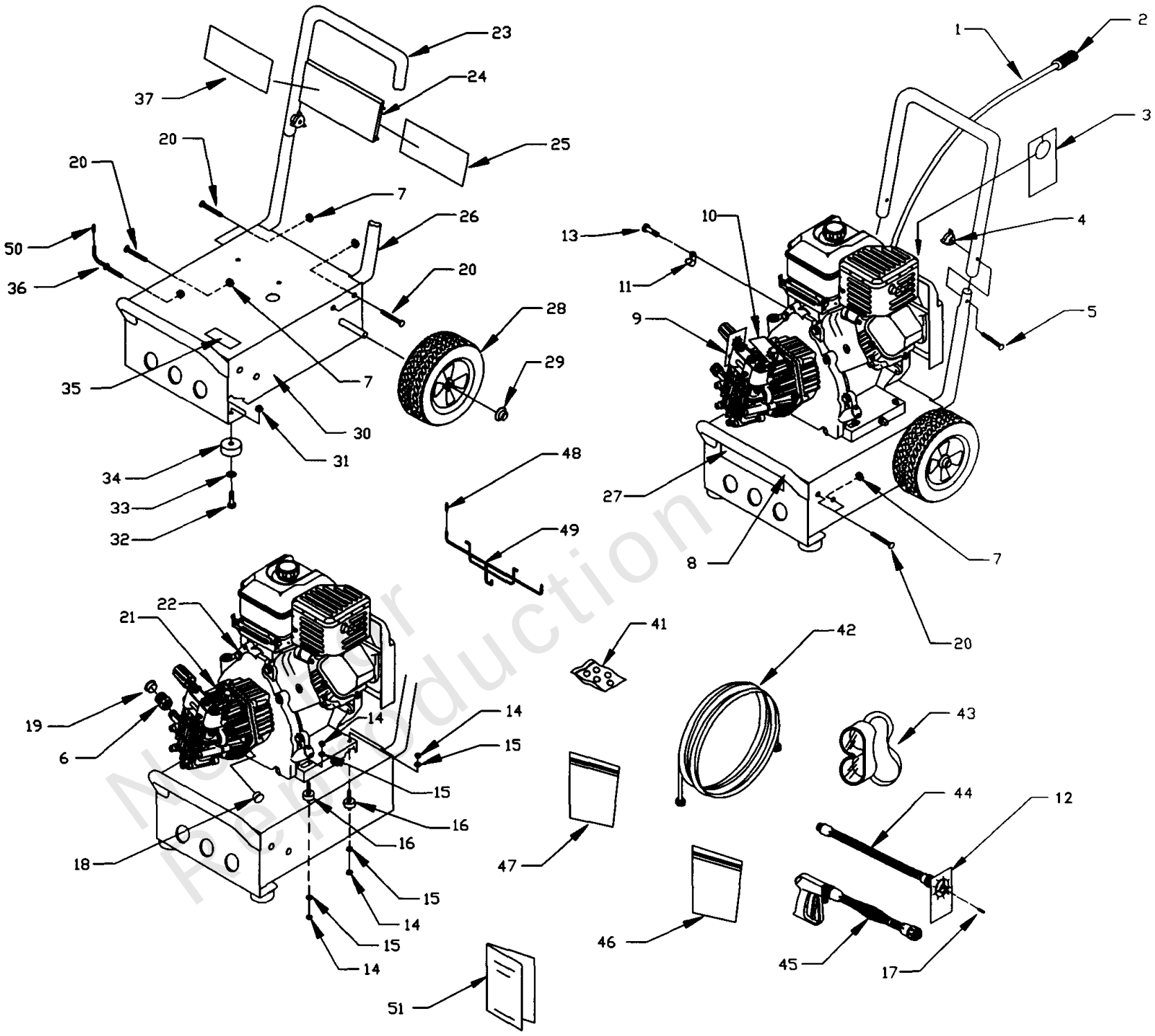

Not for Reproduction

Copyright © Briggs & Stratton. All Rights reserved

Pressure Washer

REF NO	PART NO	QTY	DESCRIPTION
1	A1040D	1	HOSE, 4-1/2' Chemical Clear
2	A1041	1	FILTER, Chemical Hose
3	70453	1	TAG, Warning Oil
4	97178	2	KNOB, Handle 1/4-20PW
5	31669	2	BOLT, 1/4-20 x 1-3/4 Carriage
6	21424	1	CONNECTOR, Garden Hose
7	99583	8	NUT, Flange Lock 5/16-28
8	B1982	1	BUMPER
9	97054	1	TAG, Pres. Adjust
10	B1288	1	TAG, PW Breather Cap
11	B2718	1	CLAMP, Hose 7/16" Dia.
13	32713	1	SCREW, Taptite #10-32 x 5/8" Lg
12	97566	1	TAG, Nozzle
14	45771	8	NUT, M8-1.25 Hex
15	22129	8	LOCKWASHER, M8
16	21217	4	MOUNT, Rubber Shock
17	B1236F		NOZZLE, Replacement 1.25 mm
18	97100	1	CAP, H.P. Adaptor
19	97098	1	CAP, Garden Hose Inlet
20	B2043	7	BOLT, 5/16-18 x 1-3/4" Carriage
21	-----	1	ASSEMBLY, Pump -(For Replacement, order 198347GS)
21	198347GS	1	REPLACEMENT PUMP ASSEMBLY
22	B1827	1	ENGINE
23	B1983	1	HANDLE
24	B1631A	1	BILLBOARD, Plastic
25	B1932	1	DECAL, Instructions
26	B1981	2	SUPPORT, Handle
27	B2192	1	DECAL, Generac
28	B1760	2	ASSEMBLY, 10" Tire & Wheel
29	75402	2	PUSHNUT, .50 Dia.
30	AB1770	1	BASE
31	52858	2	NUT, M8 1.25 Locking
32	42909	2	HHCS, M8 1.25 x 30
33	50190	2	WASHER, M8 Flat
34	27007	2	MOUNT, Donut Type Vibration
35	20566	1	DECAL, Generac #1-800
36	B2150	1	HOOK, Gun
37	B2146	1	DECAL, Logo
41	B3057	1	KIT, O-Ring
42	B1969	1	HOSE, High Pressure
43	87815	1	GOGGLES, Safety
44	B1867F	1	WAND
45	B1861	1	GUN, High Pressure
46	B2203	1	KIT, Handle Fastening
47	B2163	1	KIT, Cleaning
48	B1460	2	CAP, Vinyl (black)
49	B2168	1	HANGER, Hose, Gun, Jug
50	B2516	1	CAP, Vinyl (black)
51	B3236	1	MANUAL

Not For Reproduction

Copyright © Briggs & Stratton. All Rights reserved

Note: Unless noted otherwise, use the standard torque specifications

Mfg. No: 1042-3

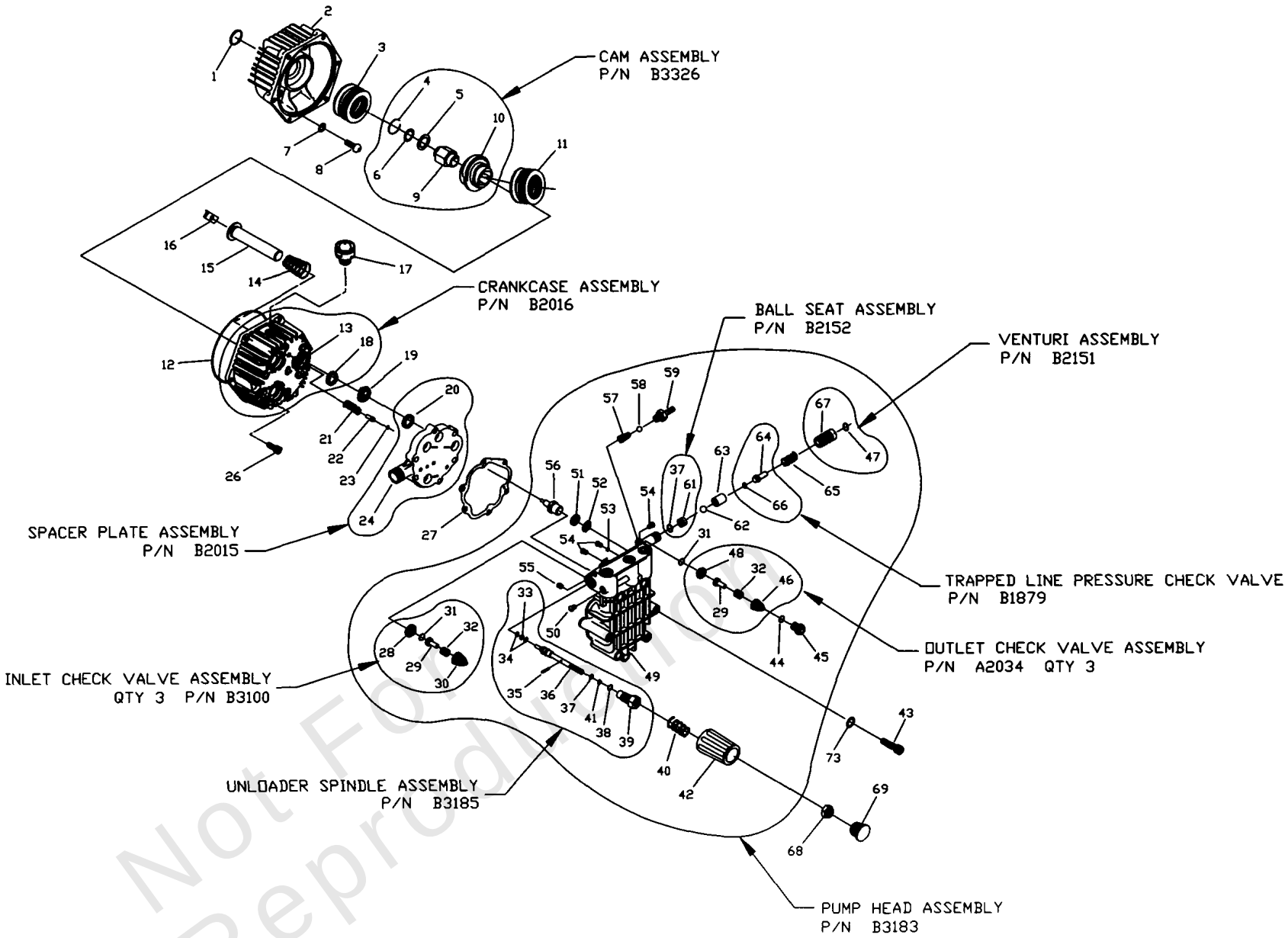

Not For Reproduction

Copyright © Briggs & Stratton. All Rights reserved

Pump

REF NO	PART NO	QTY	DESCRIPTION
1	B2218	1	O-RING, 1.625" x 0.103
2	B2260	1	ADAPTER, Engine
3	96542	1	BEARING, Eng. Adptr. Roller Thrust 4 x 4
4	97675	1	C - RING, Cam Retainer
5	97570	1	WASHER, Thrust
6	95524	1	WASHER, Retainer
7	B2217	4	O-RING, 0.239 ID x 0.070
8	B2261B	4	SCREW, Button Hd 5/16 - 24 x 3/4" Lg
9	95435	1	ADAPTER, Engine Shaft 3/4"
10	21277V	1	CAM, Axial 7.5 Lift
11	97606	1	BEARING, Axial Cam Roller Thrust 5.5 x 4
12	93790	1	"O" RING, Crankcase 113.97 x 119.21 x 2.62
13	97568A	1	CRANKCASE, Pump
14	96400	3	SPRING, Piston Return
15	99427	3	ASSEMBLY, Ceramic Piston & Cap
16	94944	3	SHOE, Piston Pivot
17	99735	1	ASSEMBLY, Breather
18	93680	3	SEAL, Oil Piston
19	93668	3	SPACER, Pilot
20	93667	3	SEAL, U - Cup ELF
21	93652	1	SPRING, Thermal Relief Actuator
22	95416	1	PISTON, Thermal Relief Actuator
23	93876	1	"O" RING, Thermal Relief 2.9 x 6.5 x 1.78
24	A1320	1	SPACER, Inlet Plate
26	40945	6	SCREW, SHC M6 x 1.0 x 20 mm Lg
27	A2069	1	GASKET, Head
28	A2062	3	SEAT, Check Valve Inlet
29	A2060	6	POPPET, Check Valve
30	97931	3	CAGE, Check Valve Inlet
31	B2640	6	"O" RING, Chk Valve 12.4 x 15.96 x 1.78
32	97929	6	SPRING, Check Valve Outlet
33	97843	1	"O" RING, 9.25 x 12.81 x 1.78
34	A2017	2	PAR-BACK, Backup Ring
35	A1719	1	PIN, 2.0 Dia. Spindle
36	B3184	1	SPINDLE, Pressure Regulator
37	93656	2	"O" RING, Spindle 6 x 10 x 1.78
38	A3829	1	"O" RING, Retainer Nut 14 x 17.56 x 1.78
39	A1712	1	NUT, Retainer - Spindle
40	A1716	1	SPRING, Unloader
41	A2016	1	PAR-BACK, Backup Ring
42	B3117	1	HANDLE, Unloader
43	A2013	6	BOLT, Head M8 x 1.25 x 70mm Lg
44	97840	3	"O" RING, Chk Valve Cap 15.6 x 19.16 x 1.78
45	97841	3	CAP, Outlet Port
46	20002	3	CAGE, Check Valve Outlet
47	A3805	1	"O" RING, Venturi 10.82 x 14.38 x 1.78
48	A2217	3	SEAT, Check Valve Outlet
49	A1318	1	CYLINDER, Head
50	B1758	1	PLUG, Button M8 x 1.25 x 8 mm
51	96053	3	SEAL, High Pressure
52	96015	3	RING, Bearing

Not For Reproduction

Copyright © Briggs & Stratton. All Rights reserved

Note: Unless noted otherwise, use the standard torque specifications Mfg. No: 1042-3

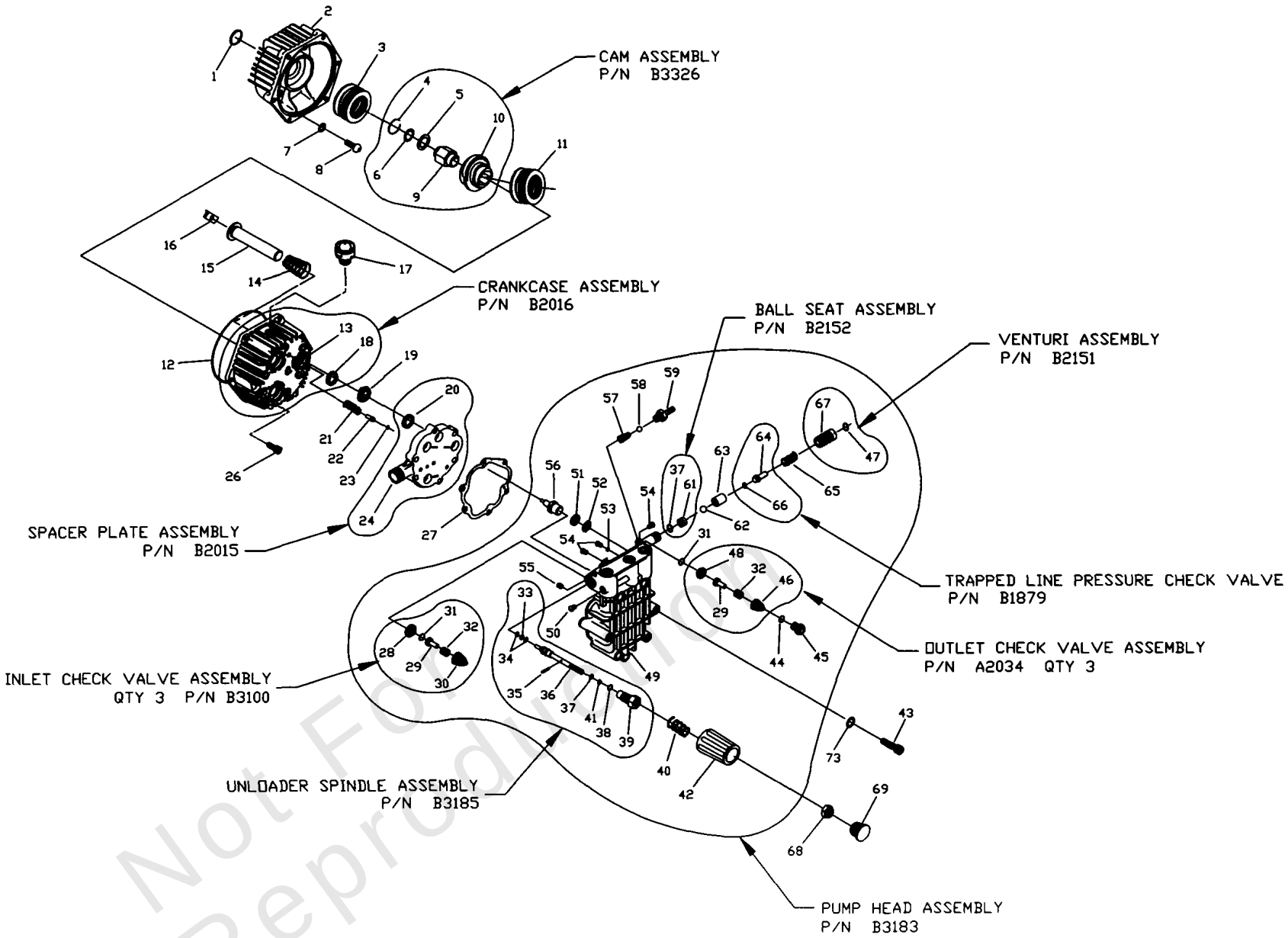

Not For Reproduction

Copyright © Briggs & Stratton. All Rights reserved

Pump

REF NO	PART NO	QTY	DESCRIPTION
53	A1717	1	MAGNET, Ball Deflector
54	B1757	4	PLUG, Button M6x1.0x8mm
55	A1718	1	SETSCREW, M8-1.25 x 8mm
56	93644	1	ACTUATOR, Thermal Relief
57	95380	1	SPRING, Chemical Injector
58	95379	1	BALL, 5.5 dia. Chemical Injector
59	A1575	1	BARB HOSE, Brass with Nylon Insert
61	A1713	1	SEAT, Ball Unloader
62	A2015	1	BALL, Stainless Steel 9/32 Dia.
63	A2503	1	SEAT, Trapped Line Pressure
64	A2756	1	VALVE, Shuttle Piston
65	89138	1	SPRING, Check Valve
66	21123	1	"O" RING, 3.68 x 7.24 x 1.78 cs
67	A1714	1	VENTURI, Chemical
68	A2014	1	SET SCREW, M6 - 1.0 x 8mm
69	B2241	1	CAP, Plastic
73	B2665	6	WASHER, Steel Spcl.
B3326	B3326		CAM ASSEMBLY
B2016	B2016		CRANKCASE ASSEMBLY
B2152	B2152		BALL SEAT ASSEMBLY
B2151	B2151		VENTURI ASSEMBLY
B1879	B1879		TRAPPED LINE PRESSURE CHECK VALVE
A2034	A2034	3	OUTLET CHECK VALVE ASSEMBLY
B3183	B3183		PUMP HEAD ASSEMBLY
B3185	B3185		UNLOADER SPINDLE ASSEMBLY
B3100	B3100	3	INLET CHECK VALVE ASSEMBLY
B2015	B2015		SPACER PLATE ASSEMBLY

Not For Reproduction

Copyright © Briggs & Stratton. All Rights reserved

Hardware Identification & Torque Specifications

Torque Specification Chart

FOR STANDARD METRIC MACHINE HARDWARE (Tolerance ± 20%)

Property Class	5.6 Class 5.6		8.8 Class 8.8		10.9 Class 10.9		12.9 Class 12.9	
Size Of Hardware	*in/lbs* **ft/lbs**	Nm.	*in/lbs* **ft/lbs**	Nm.	*in/lbs* **ft/lbs**	Nm.	*in/lbs* **ft/lbs**	Nm.
M3	*5.88*	*.56*	*13.44*	*1.28*	*19.2*	*1.80*	*22.92*	2.15
M4	*13.44*	*1.28*	*30.72*	*2.90*	*43.44*	*4.10*	*52.56*	4.95
M5	*26.4*	*2.50*	*60.96*	*5.75*	**5.97**	*8.10*	**7.15**	9.7
M6	*44.64*	*4.3*	**7.3**	*9.9*	**10.3**	*14*	**12.1**	16.5
M7	**5.2**	*7.1*	**12.1**	*16.5*	**16.9**	*23*	**19.9**	27
M8	**7.7**	*10.5*	**17.7**	*24*	**25**	*34*	**29**	40
M10	**15**	*21*	**35**	*48*	**50**	*67*	**59**	81
M12	**26**	*36*	**61**	*83*	**86.2**	*117*	**103**	140
M14	**42**	*58*	**101**	*132*	**136**	*185*	**162**	220
M16	**64**	*88*	**147**	*200*	**210**	*285*	**250**	340
M18	**89**	*121*	**202**	*275*	**287**	*390*	**346**	470
M20	**126**	*171*	**290**	*390*	**405**	*550*	**486**	660
M22	**169**	*230*	**390**	*530*	**559**	*745*	**656**	890
M24	**217**	*295*	**497**	*375*	**708**	*960*	**840**	1140
M27	**320**	*435*	**733**	*995*	**1032**	*1400*	**1239**	1680
M30	**435**	*590*	**995**	*1350*	**1401**	*1900*	**1681**	2280
M33	**590**	*800*	**1349**	*1830*	**1902**	*2580*	**2278**	3090
M36	**759**	*1030*	**1740**	*2360*	**2441**	*3310*	**2935**	3980
M39	**988**	*1340*	**2249**	*3050*	**3163**	*4290*	**3798**	5150

The guides and ruler furnished below are designed to help you select the appropriate hardware.

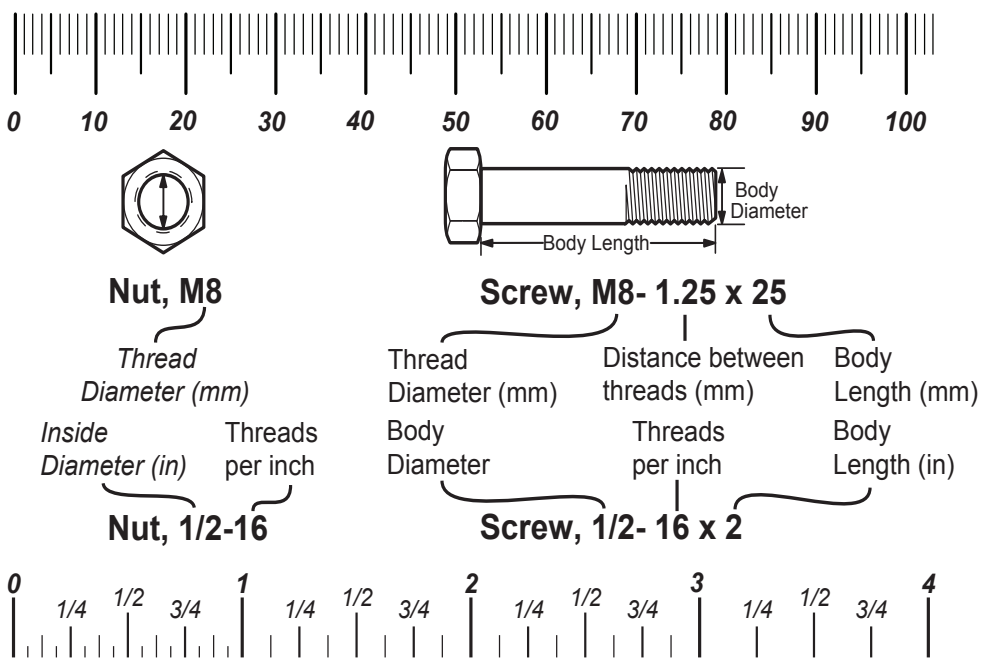

Standard Hardware Sizing

When a washer or nut is identified as **1/2"** (M8), this is the *Nominal size*, meaning the *inside diameter* is 1/2 inch (8mm metric thread diameter); if a second number is present it represents the *threads per inch* (distance between threads).

When bolt or capscrew is identified as **1/2 - 16 x 2"** (M8 - 1.25 x 50), this means the *Nominal size*, or body diameter is 1/2 inch (8mm metric thread diameter), the second number,16, represents the *threads per inch, (distance between threads).* The final number is the body length of the bolt or screw, 2 inches (50mm).

Torque Specification Chart

FOR STANDARD MACHINE HARDWARE (Tolerance ± 20%)

Hardware Grade	No Marks SAE Grade 2		SAE Grade 5		SAE Grade 8	
Size Of Hardware	*in/lbs* **ft/lbs**	Nm.	*in/lbs* **ft/lbs**	Nm.	*in/lbs* **ft/lbs**	Nm.
8-32	*19*	2.1	*30*	3.4	*41*	4.6
8-36	*20*	2.3	*31*	3.5	*43*	4.9
10-24	*27*	3.1	*43*	4.9	*60*	6.8
10-32	*31*	3.5	*49*	5.5	*68*	7.7
1/4-20	*66*	7.6	**8**	10.9	**12**	16.3
1/4-28	*76*	8.6	**10**	13.6	**14**	19.0
5/16-18	**11**	15.0	**17**	23.1	**25**	34.0
5/16-24	**12**	16.3	**19**	25.8	**29**	34.0
3/8-16	**20**	27.2	**30**	40.8	**45**	61.2
3/8-24	**23**	31.3	**35**	47.6	**50**	68.0
7/16-14	**30**	40.8	**50**	68.0	**70**	95.2
7/16-20	**35**	47.6	**55**	74.8	**80**	108.8
1/2-13	**50**	68.0	**75**	102.0	**110**	149.6
1/2-20	**55**	74.8	**90**	122.4	**120**	163.2
9/16-12	**65**	88.4	**110**	149.6	**150**	204.0
9/16-18	**75**	102.0	**120**	163.2	**170**	231.2
5/8-11	**90**	122.4	**150**	204.0	**220**	299.2
5/8-18	**100**	136	**180**	244.8	**240**	326.4
3/4-10	**160**	217.6	**260**	353.6	**386**	525.0
3/4-16	**180**	244.8	**300**	408.0	**420**	571.2
7/8-9	**140**	190.4	**400**	544.0	**600**	816.0
7/8-14	**155**	210.8	**440**	598.4	**660**	897.6
1-8	**220**	299.2	**580**	788.8	**900**	1,244.0
1-12	**240**	326.4	**640**	870.4	**1,000**	1,360.0

NOTES

1. These torque values are to be used for all hardware excluding: locknuts, self-tapping screws, thread forming screws, sheet metal screws and socket head setscrews.
2. Recommended seating torque values for locknuts:
   a. for prevailing torque locknuts - use 65% of grade 5 torques.
   b. for flange whizlock nuts and screws - use 135% of grade 5 torques.
3. Unless otherwise noted on assembly drawings, all torque values must meet this specification.

Common Hardware Types

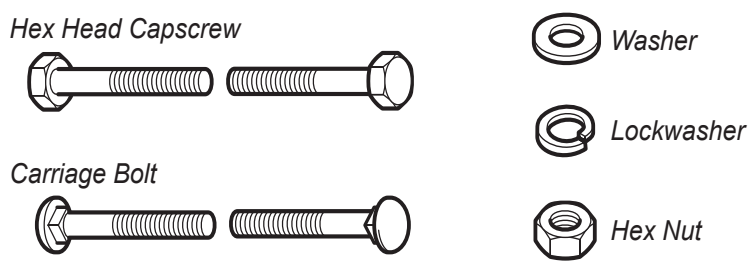

Wrench & Fastener Size Guide

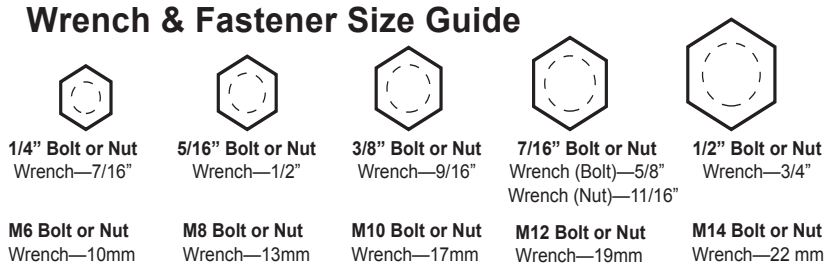

Copyright © Briggs & Stratton. All Rights reserved