Parts Manual

Mfg. No: 1017-0
MC7500

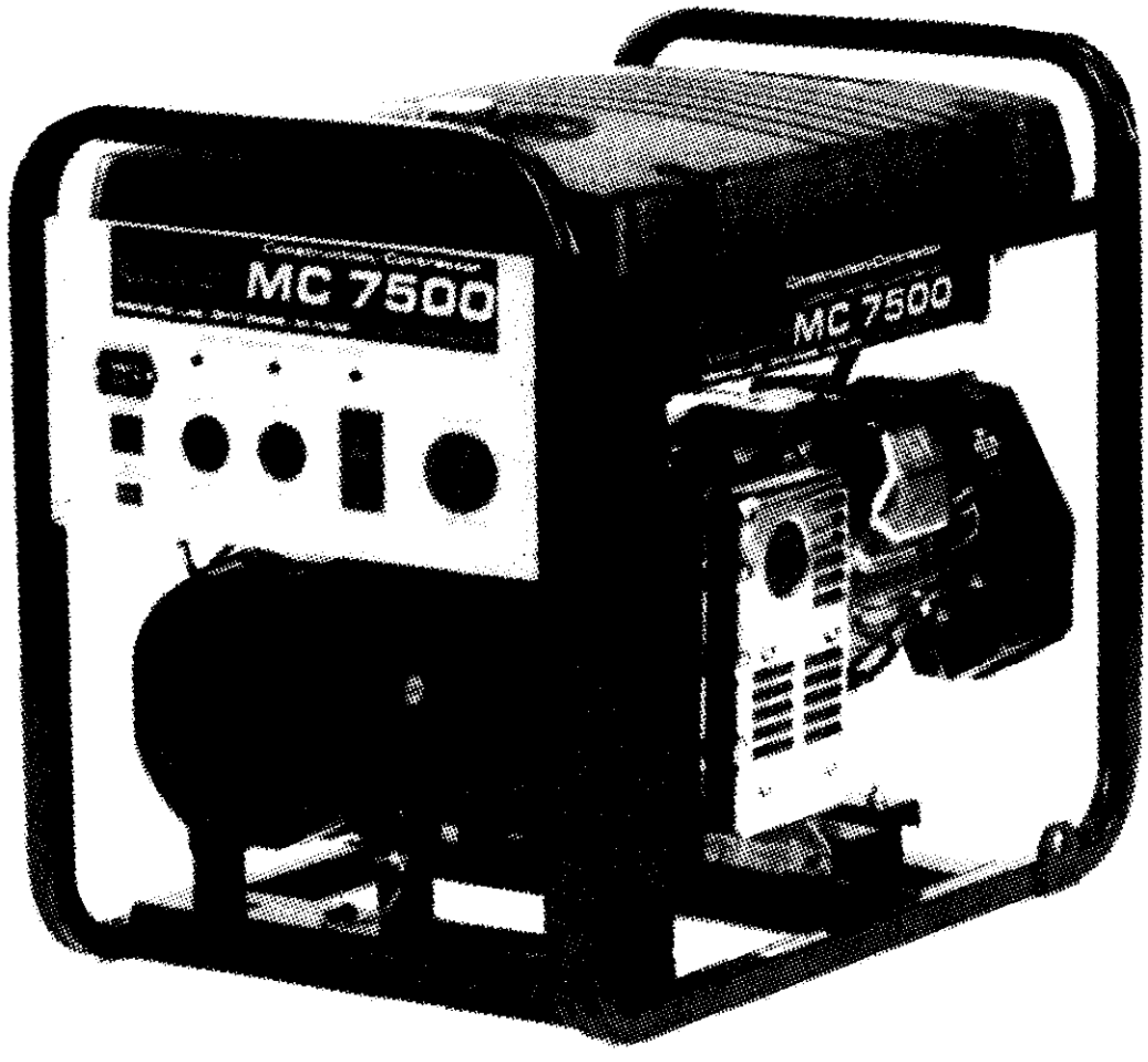

Copyright © Briggs & Stratton. All Rights reserved

Model Components

Page

Control Panel. 4
Electrical Data. 6
Generator. 8
Torque Specification Chart. 12

Not For Reproduction

Copyright © Briggs & Stratton. All Rights reserved

Control Panel

Note: Unless noted otherwise, use the standard torque specifications

Mfg. No: 1017-0

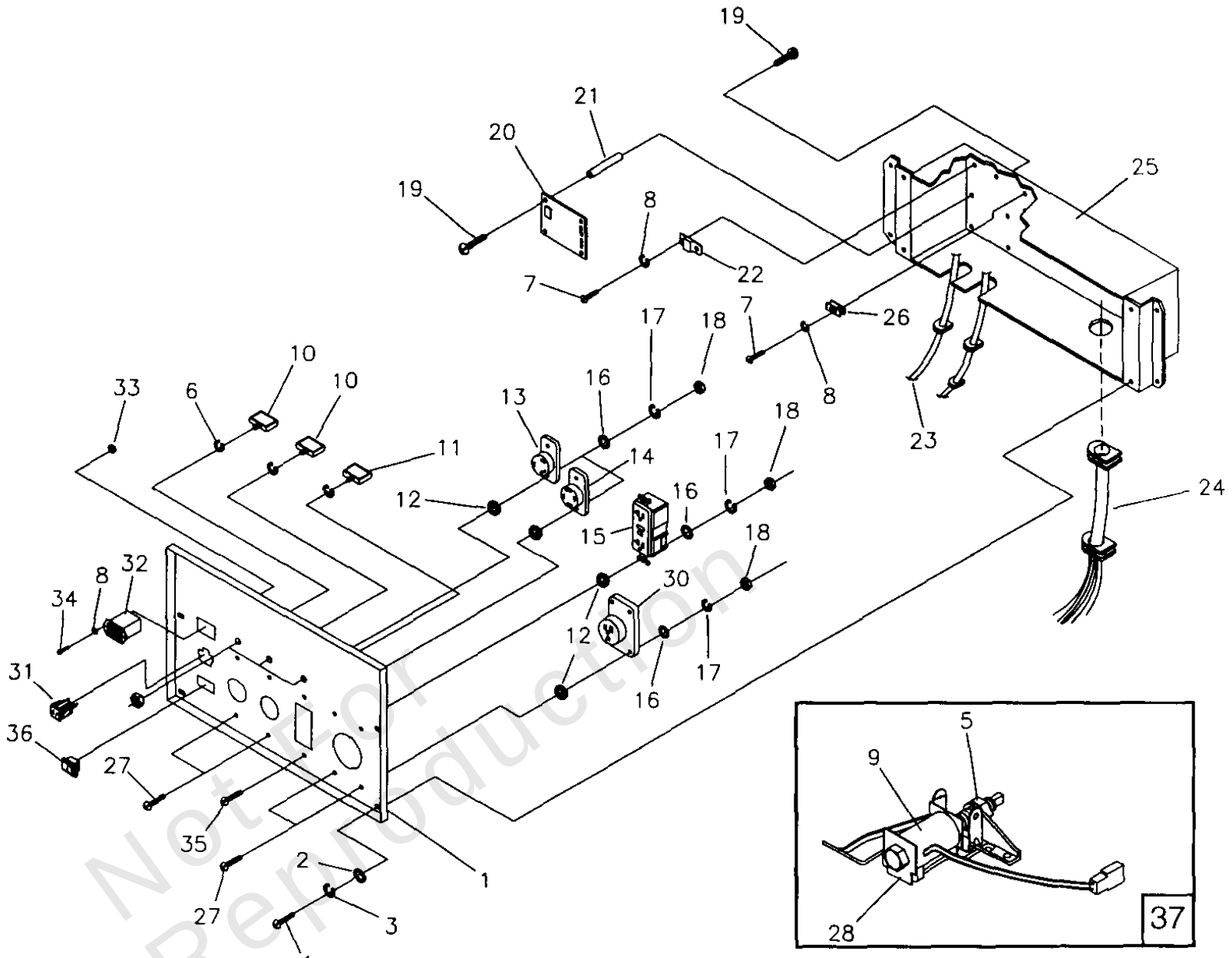

Not for Reproduction

Copyright © Briggs & Stratton. All Rights reserved

Control Panel

REF NO	PART NO	QTY	DESCRIPTION
1	B2263	1	PANEL, Control
2	23897	4	WASHER, #10 M5 Flat
3	49226	4	WASHER, M5 Lock
4	91526	4	SCREW, M5-0.8 x 12 mm
5	66311	1	JAM NUT, M8 - 1.25
6	82881	3	WASHER, 7/16" Int. Lock
7	43181	4	SCREW, M3 - 0.5 x 10 mm
8	43182	6	WASHER, M3 Lock
9	73101	1	BRACKET, Gov. Adjust with Idle
10	75207-A	2	CIRCUIT BREAKER, 30 AMP
11	75207	2	CIRCUIT BREAKER, 20 AMP
12	23365	10	WASHER, #8 Shakeproof
13	68868	1	OUTLET, 30A, 120V Locking Type
14	43437	1	OUTLET, 304, 120V/240V Locking Type
15	80409	1	RECEPTACLE, Duplex GFCI 120A
16	43180	10	WASHER, M4 Flat
17	22264	10	WASHER, 08 M4 Lock
18	51715	10	NUT, M4 - 0.7 Hex
19	64526	8	SCREW, #6-32 x 3/8"
20	83970	1	BOARD, System Control
21	64525	4	3/4" Hex Standoff
22	87962	1	CIRCUIT BREAKER, 10A (automatic), 12V
23	84335	1	ASSEMBLY, Wire Harness
24	84134	1	GROMMET, Rubber Connector
25	92069	1	BOX, Control Panel
26	84028	1	TRANSFORMER, Idle Control
27	75475	9	SCREW, M4 - 0.7 x 10 mm
28	83782	1	ASSEMBLY, Idle Coil
30	74191	1	OUTLET, 50A, 240V
31	90418	1	OUTLET, 10A, 12VDC
32	77604	1	HOURMETER
33	51714	2	NUT, M3 - 0.5 Hex
34	55823	2	PHMS, M3 - 0.5 x 16
35	75476	1	PPHMS, M4 - 0.7 x 16
36	82538	1	SWITCH, On - Off Idle control
37	83782	1	Idle Control Assembly

Not For Reproduction

Copyright © Briggs & Stratton. All Rights reserved

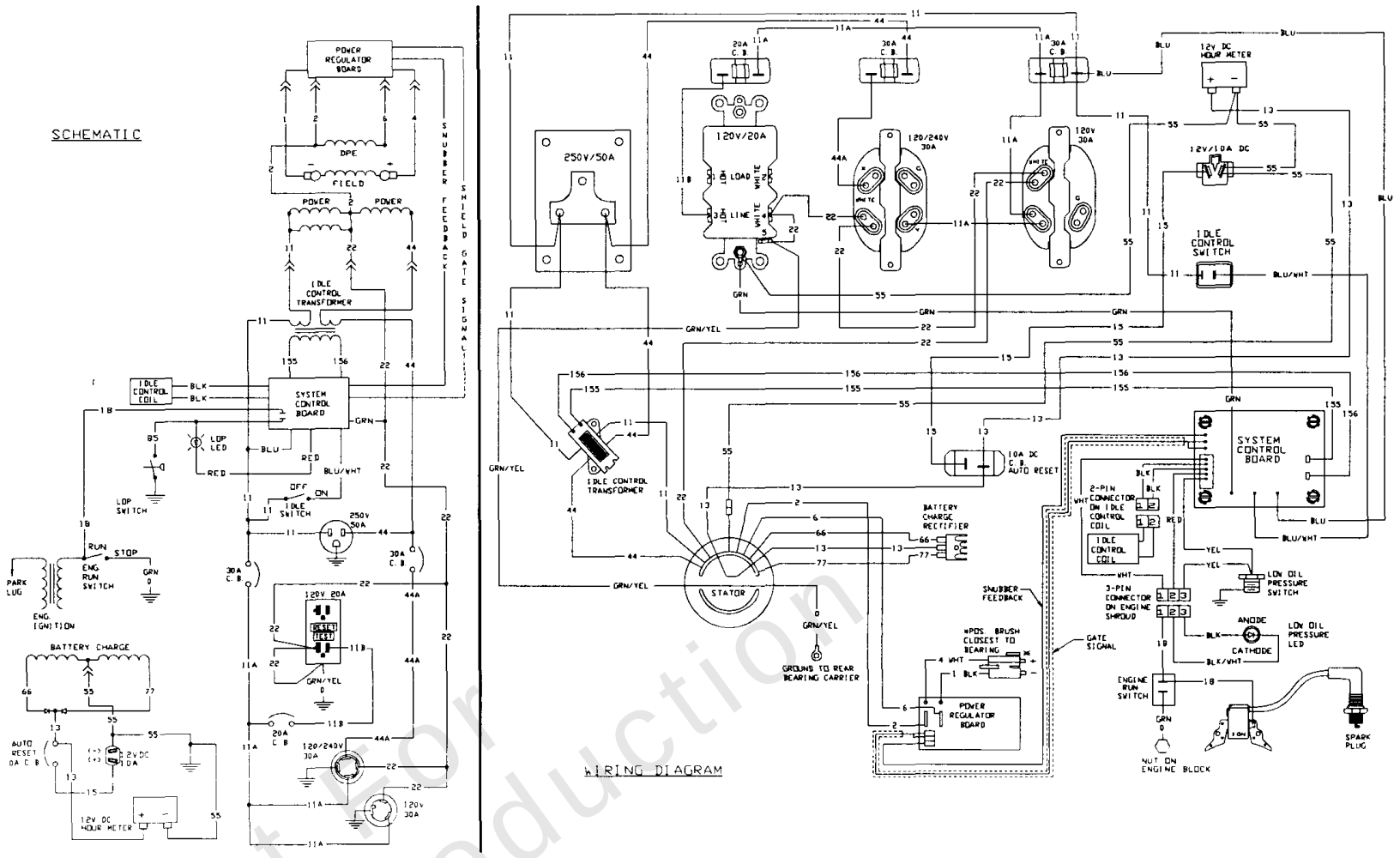

Not for Reproduction

Electrical Data

REF NO	PART NO	QTY	DESCRIPTION
--	-----		Wiring Diagram/Schematic only
--	-----		WARNING - Generator Voltage Could Cause Electrical Shock or Burn Resulting in Death Or Serious Injury. To Avoid Electrical Shock Or Burn Hazard, Please Refer Service To Qualified Personnel.

Not For Reproduction

Copyright © Briggs & Stratton. All Rights reserved

Generator

Note: Unless noted otherwise, use the standard torque specifications

Mfg. No: 1017-0

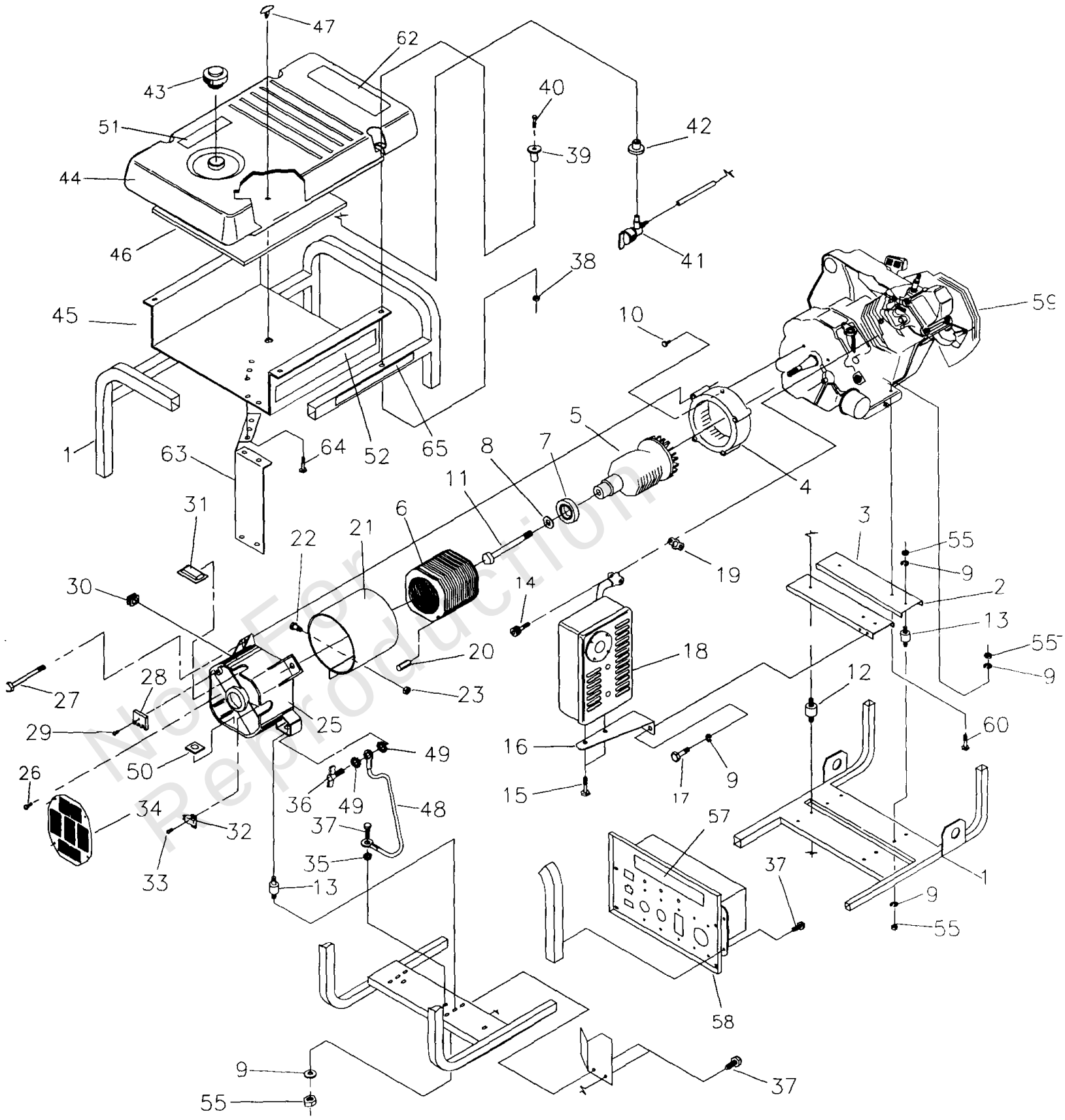

Copyright © Briggs & Stratton. All Rights reserved

Generator

REF NO	PART NO	QTY	DESCRIPTION
1	92432	1	CRADLE
2	92531	1	SUPPORT, Engine
3	92731	1	SUPPORT, Engine & Muffler
4	92247	1	HOUSING, Engine Adaptor
5	B1341G	1	ASSEMBLY, Rotor
6	B1342G	1	ASSEMBLY, Stator
7	65791	1	BEARING
8	67451	1	WASHER, Flat M8
9	22129	12	WASHER, Lock - M8
10	86307	4	HHMS, 5/16-24 x 3/4 Lg. SEMS
11	47481	1	HHCS, 5/16-24 x 10.625 Lg.
12	92609	2	MOUNT, Vibration
13	82857	4	MOUNT, Vibration
14	40976	2	SCREW, M8 - 1.25 x 20
15	66476	2	CAPSCREW, M6 - 1.0 x 12mm
16	92532	1	BRACKET, Muffler
17	22142	2	SCREW, 5/16 - 18 x 3/4
18	91153	1	MUFFLER
19	90239	1	GASKET, Muffler
20	81917	1	PIN, Roll 4mm x 10
21	81887J	1	WRAP, Stator
22	52618	2	HHCS, M5-0.8 x 12 Lg.
23	52856	2	NUT, Locking-M5
25	66825C	1	CARRIER, Rear Bearing
26	74908	4	TAPTITE, M5-0.8 x 10 Lg.
27	66449L	4	BOLT, Stator M6-1 x 165mm
28	65795	1	RECTIFIER, Battery Charge
29	66849A	1	TAPTITE, M5-0.8 x 20 Lg.
30	67022	1	GROMMET, Rubber
31	84132	1	ASSEMBLY, Power Regulator
32	66386	1	ASSEMBLY, Brush Holder
33	66849	2	TAPTITE, M5-0.8 x 16 Lg.
34	78388	1	COVER, Bearing Carrier
35	22769	1	WASHER, Shakeproof Int. #10
36	86494	1	SCREW, M6-1.0 x 16 Lg. Wing
37	86292	7	HHCS, - #10 Self Driller
38	77395	4	NUT, Flange Lock - M6
39	83465	4	GROMMET, Tank
40	78831B	4	HHMS, M6-1.0 x 60 (black)
41	80270	1	VALVE, Tank
42	78299	1	BUSHING, Plastic Tank
43	94834	1	CAP, Fuel
44	93595	1	TANK, Fuel
45	92039	1	SHIELD, Heat
46	92665	1	INSULATION, #2-1/4" Thick
47	85000	1	CLIP, Insulation
48	143-53621	1	WIRE, Ground
49	-----	2	LW, EXT, Shakeproof M6
50	57593	1	MOUNT, Cable Tie
51	92982	1	DECAL, Danger
52	B2174	2	DECAL, Heat Shield

Not For Reproduction

Copyright © Briggs & Stratton. All Rights reserved

Generator

Note: Unless noted otherwise, use the standard torque specifications

Mfg. No: 1017-0

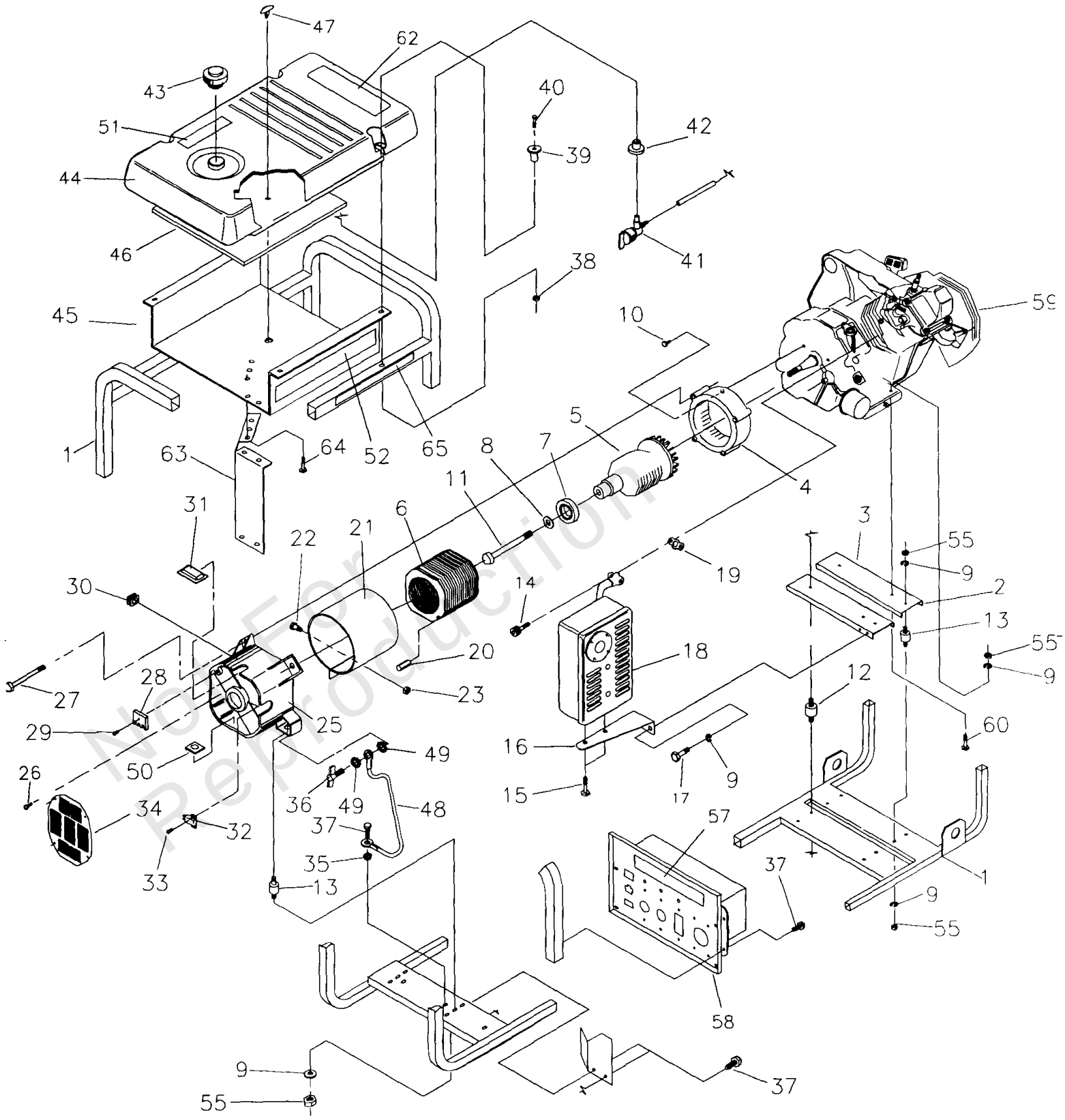

Copyright © Briggs & Stratton. All Rights reserved

Generator

REF NO	PART NO	QTY	DESCRIPTION
55	25244	12	NUT, 5/16-18 Hex
57	B2173	1	DECAL, Control Panel
58	B2171	1	ASSEMBLY, Control Box
59	~NSP	1	ENGINE, 15 HP., ENGB1394
60	22531	2	HHCS, 5/16-18 x 1-3/4" Lg.
62	93826	1	DECAL, Start Instructions
63	96068	1	SHIELD, Heat
64	56893	5	CRIMPTITE, 10-24 x 1/2
65	93221	1	DECAL, Cradle

Not For Reproduction

Copyright © Briggs & Stratton. All Rights reserved

Hardware Identification & Torque Specifications

Torque Specification Chart

FOR STANDARD METRIC MACHINE HARDWARE (Tolerance ± 20%)

Property Class	5.6 Class 5.6		8.8 Class 8.8		10.9 Class 10.9		12.9 Class 12.9	
Size Of Hardware	*in/lbs* **ft/lbs**	Nm.	*in/lbs* **ft/lbs**	Nm.	*in/lbs* **ft/lbs**	Nm.	*in/lbs* **ft/lbs**	Nm.
M3	*5.88*	*.56*	*13.44*	*1.28*	*19.2*	*1.80*	*22.92*	2.15
M4	*13.44*	*1.28*	*30.72*	*2.90*	*43.44*	*4.10*	*52.56*	4.95
M5	*26.4*	*2.50*	*60.96*	*5.75*	**5.97**	*8.10*	**7.15**	9.7
M6	*44.64*	*4.3*	**7.3**	*9.9*	**10.3**	*14*	**12.1**	16.5
M7	**5.2**	*7.1*	**12.1**	*16.5*	**16.9**	*23*	**19.9**	27
M8	**7.7**	*10.5*	**17.7**	*24*	**25**	*34*	**29**	40
M10	**15**	*21*	**35**	*48*	**50**	*67*	**59**	81
M12	**26**	*36*	**61**	*83*	**86.2**	*117*	**103**	140
M14	**42**	*58*	**101**	*132*	**136**	*185*	**162**	220
M16	**64**	*88*	**147**	*200*	**210**	*285*	**250**	340
M18	**89**	*121*	**202**	*275*	**287**	*390*	**346**	470
M20	**126**	*171*	**290**	*390*	**405**	*550*	**486**	660
M22	**169**	*230*	**390**	*530*	**559**	*745*	**656**	890
M24	**217**	*295*	**497**	*375*	**708**	*960*	**840**	1140
M27	**320**	*435*	**733**	*995*	**1032**	*1400*	**1239**	1680
M30	**435**	*590*	**995**	*1350*	**1401**	*1900*	**1681**	2280
M33	**590**	*800*	**1349**	*1830*	**1902**	*2580*	**2278**	3090
M36	**759**	*1030*	**1740**	*2360*	**2441**	*3310*	**2935**	3980
M39	**988**	*1340*	**2249**	*3050*	**3163**	*4290*	**3798**	5150

The guides and ruler furnished below are designed to help you select the appropriate hardware.

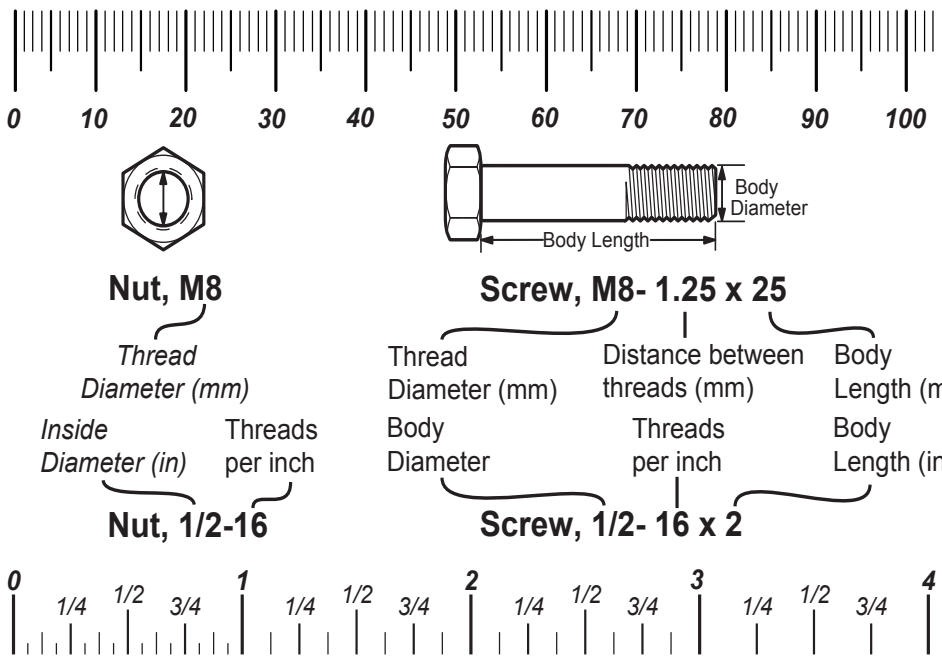

Standard Hardware Sizing

When a washer or nut is identified as **1/2"** (M8), this is the *Nominal size*, meaning the *inside diameter* is 1/2 inch (8mm metric thread diameter); if a second number is present it represents the *threads per inch* (distance between threads).

When bolt or capscrew is identified as **1/2 - 16 x 2"** (M8 - 1.25 x 50), this means the *Nominal size*, or body diameter is 1/2 inch (8mm metric thread diameter), the second number,16, represents the *threads per inch, (distance between threads).* The final number is the body length of the bolt or screw, 2 inches (50mm).

Torque Specification Chart

FOR STANDARD MACHINE HARDWARE (Tolerance ± 20%)

Hardware Grade	No Marks SAE Grade 2		SAE Grade 5		SAE Grade 8	
Size Of Hardware	*in/lbs* **ft/lbs**	Nm.	*in/lbs* **ft/lbs**	Nm.	*in/lbs* **ft/lbs**	Nm.
8-32	*19*	2.1	*30*	3.4	*41*	4.6
8-36	*20*	2.3	*31*	3.5	*43*	4.9
10-24	*27*	3.1	*43*	4.9	*60*	6.8
10-32	*31*	3.5	*49*	5.5	*68*	7.7
1/4-20	*66*	7.6	**8**	10.9	**12**	16.3
1/4-28	*76*	8.6	**10**	13.6	**14**	19.0
5/16-18	**11**	15.0	**17**	23.1	**25**	34.0
5/16-24	**12**	16.3	**19**	25.8	**29**	34.0
3/8-16	**20**	27.2	**30**	40.8	**45**	61.2
3/8-24	**23**	31.3	**35**	47.6	**50**	68.0
7/16-14	**30**	40.8	**50**	68.0	**70**	95.2
7/16-20	**35**	47.6	**55**	74.8	**80**	108.8
1/2-13	**50**	68.0	**75**	102.0	**110**	149.6
1/2-20	**55**	74.8	**90**	122.4	**120**	163.2
9/16-12	**65**	88.4	**110**	149.6	**150**	204.0
9/16-18	**75**	102.0	**120**	163.2	**170**	231.2
5/8-11	**90**	122.4	**150**	204.0	**220**	299.2
5/8-18	**100**	136	**180**	244.8	**240**	326.4
3/4-10	**160**	217.6	**260**	353.6	**386**	525.0
3/4-16	**180**	244.8	**300**	408.0	**420**	571.2
7/8-9	**140**	190.4	**400**	544.0	**600**	816.0
7/8-14	**155**	210.8	**440**	598.4	**660**	897.6
1-8	**220**	299.2	**580**	788.8	**900**	1,244.0
1-12	**240**	326.4	**640**	870.4	**1,000**	1,360.0

NOTES

1. These torque values are to be used for all hardware excluding: locknuts, self-tapping screws, thread forming screws, sheet metal screws and socket head setscrews.
2. Recommended seating torque values for locknuts:
   a. for prevailing torque locknuts - use 65% of grade 5 torques.
   b. for flange whizlock nuts and screws - use 135% of grade 5 torques.
3. Unless otherwise noted on assembly drawings, all torque values must meet this specification.

Common Hardware Types

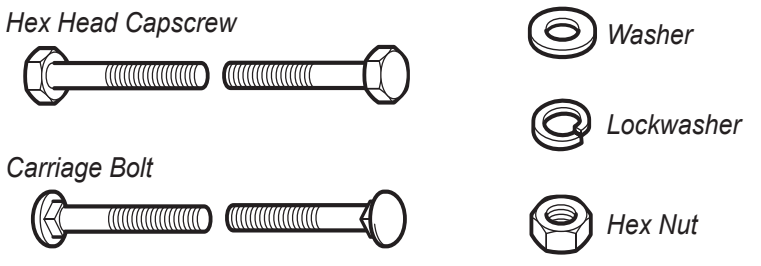

Wrench & Fastener Size Guide

1/4" Bolt or Nut Wrench—7/16"

5/16" Bolt or Nut Wrench—1/2"

3/8" Bolt or Nut Wrench—9/16"

7/16" Bolt or Nut Wrench (Bolt)—5/8" Wrench (Nut)—11/16"

1/2" Bolt or Nut Wrench—3/4"

M6 Bolt or Nut Wrench—10mm

M8 Bolt or Nut Wrench—13mm

M10 Bolt or Nut Wrench—17mm

M12 Bolt or Nut Wrench—19mm

M14 Bolt or Nut Wrench—22 mm

Copyright © Briggs & Stratton. All Rights reserved